# CLIMATE CONTROL: AUTOMATIC AIR CONDITIONER

## INDEX

GENERAL DESCRIPTION . . . . . 32B-2
RECIRCULATION AND AIR TEMPERATURE FAN CONTROL . . . . . 32B-4
Wiring Diagram . . . . . 32B-4
Functional Description . . . . . 32B-6/1
Components and Connectors . . . . . 32B-8
COMPRESSOR ENGAGEMENT (Petrol version) . . . . . 32B-13
Wiring Diagram . . . . . 32B-13
Functional Description . . . . . 32B-14/1
Components and Connectors . . . . . 32B-15
COMPRESSOR ENGAGEMENT (TD version) . . . . . 32B-18
Wiring Diagram . . . . . 32B-18
Functional Description . . . . . 32B-19
Components and Connectors . . . . . 32B-20
COMPRESSOR ENGAGEMENT (JTD version) . . . . . 32B-22/1
Wiring Diagram . . . . . 32B-22/1
Functional Description . . . . . 32B-22/2
Components and Connectors . . . . . 32B-22/3
CHECKING ENGINE FAN . . . . . *
LOCATION OF COMPONENTS (petrol versions) . . . . . 32B-23
LOCATION OF COMPONENTS (TD versions) . . . . . 32B-24
LOCATION OF COMPONENTS (JTD versions) . . . . . 32B-24/1
FAULT-FINDING TABLE . . . . . 32B-25
CHECK COMPONENTS . . . . . 32B-27

(*) **The engine cooling fan control system is quite the same as the one for cars with MANUAL CONDITIONER - See section 32A.**

## GENERAL DESCRIPTION

The system with thermostatic adjustment controls the climate control system semi-automatically:

In fact it automatically controls the following - on the basis of the temperature required in the passenger compartment - :

– air temperature at the vents

– fan speed (continuously changing);

On manual intervention it controls:

– fixed fan speed (4th speed)

– compressor engagement (air cooling circuit)

– air recirculation engagement

– "fast defrosting" function

The distribution of the air flow to the various vents is adjusted completely by hand (through bowden cables).

### Operating logic

A special electronic control unit manages automatic operation of the system controlling the thermodynamic parameters in order to provide the climatic comfort (temperature and humidity) required by the occupants of the vehicle.

According to the requests received and the temperature conditions detected, the control unit sets certain functions to adapt the temperature of the passenger compartment to the one required (for further details see Group 50).

### Controls:

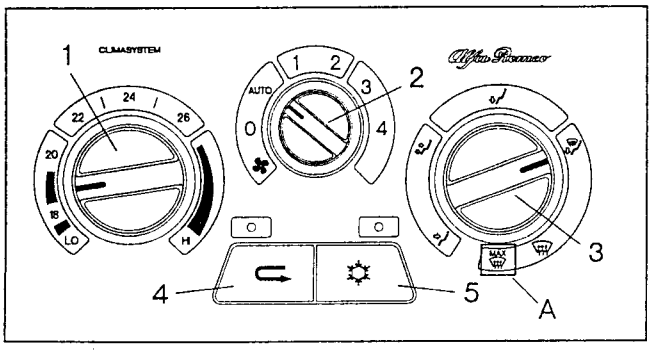


The left knob (1) selects the temperature required: it is connected to a potentiometer which detects the various angular positions and transmits a signal to the electronic control unit for a total of 15 different positions (one step corresponds to one degree centigrade); the two extreme positions "LO" and "HI" correspond to the request respectively for the coldest and warmest level.

The centre knob (2) adjusts air ventilation : this too, is connected to a potentiometer which detects the different angular positions and transmits a signal to the electronic control unit. There are four possible types of air flow with fixed manual settings (1, 2, 3 and 4), while in the "AUTO" position, the system itself automatically selects the most suitable flow rate for reaching or keeping the required temperature.

**NOTE**: Position "0" indicates minimum ventilation: the fan is off and only a light flow of dynamic air will go through the vents.
With the compressor engaged, the fan is always "forced at first speed, also with the knob at "0".

The right knob (3) selects air flow distribution to the passenger compartment which can take place in five different ways: this selection takes place manually through a cable that controls the movement of the distribution ports.

When the distributor knob is turned completely clockwise it activates - through a special microswitch - the "fast defrosting" function - yellow serigraph "A" - fast defrosting involves:

– maximum air flow rate

– mixing with the highest amount of warm air available

– dynamic air, regardless of the position of the button (5)

– compressor enabled, regardless of the position of the button (4)

When button (4) is pressed it enables operation of the compressor (air cooling circuit); when the button is released it cuts off the compressor. Engagement is fully manual: only in the "fast defrosting" mode is the compressor still enabled also when the button is released.

Actual compressor engagement however, also depends on other conditions:

– outside temperature below 5°C: (disengagement below 4°C and re-engagement above 6°C)

– temperature detected by the antifrost sensor: (disengagement below 3.5°C, re-engagement above 5°C).

The compressor may also be disengaged by the 4 level pressure switch or by the engine control unit. This logic depends on the different engine control units, as described in the specific "Engine Control" sections.

When button (5) is pressed it engages the air recirculation function; when the button is released it allows "dynamic" air from outside into the passenger compartment.

Engagement takes place only manually: recirculation is cut off even if the button is pressed only in the "fast defrosting" mode.

## Air cooling system:

This is a closed loop system in which a fluid condenses and evaporates withdrawing heat from the air in the evaporator.

It mainly comprises:

**compressor**, operated by the crankshaft through a belt: it is turned on and off through an electromagnetic joint controlled by the air conditioning system:

- Petrol version: the compressor is controlled by the electronic engine management system which adapts the idle speed when the compressor is engaged, or cuts it off under power absorption conditions which adversely affect the performance levels of the car;
- TD version: compressor engagement is controlled by a special control unit which takes account of a series of operating conditions of the system and of the engine, as described below.

**NOTE:**in both cases a **variable displacement compressor** is used: this configuration is made through a suitable adjustment valve and sloping plate which changes the inside geometry. This makes it possible to meet the different requirements of cold air without continuously energising and energising the electromagnetic joint: in fact the compressor will set itself to the maximum displacement position for high requirements and vice versa for low requirements.

**condenser**, fitted in front of the engine coolant fluid radiator: when the car is stationary it stops the air needed for heat exchange, it is supplied operating the engine radiator fan;

**evaporator**, exchanger that cools the air, located in the duct-distributor;

**accumulator/drier**, which separates the fluid in liquid state from gas and also acts as a storage lung and filter for any foreign matter;

**four-level pressure switch (trinary)**: controls the safety and correct operation of the fluid circuit.

The 4 levels cut in at:

- 1st level = minimum pressure for compressor engagement.
- 2nd level = pressure requiring engagement of the first speed of the fans.
- 3rd level = pressure requiring engagement of the second speed of the fans (level not present in the previous 3-level pressure switches).
- 4th level = maximum pressure for compressor engagement.

**compressor cut out thermal contact**: - only TD version - : this cuts off the compressor if the engine temperature reaches dangerously high values (it is a contact on the thermostatic cup which opens the circuit above 111°C.

**full load switch** - only TD version - : this is a mechanical microswitch on the injection pump which, through the special compressor cut out control unit, cuts off the compressor, only temporarily, when the accelerator pedal is completely depressed (full load).

**compressor cut out control unit** - only TD version - : this momentaneously disengages the cooling system under certain particular conditions in which the engine needs to deliver maximum power to the wheels, eliminating the power absorption of the compressor (e.g. when overtaking, fast acceleration, up hills, etc.).
The control unit brings about the following **operating logic**, or rather two different logics at low and high engine speed: below 2000 rpm as soon as the full load switch closes, the compressor electromagnetic joint is de- energised, and it is engaged as soon as the switch opens again; above 2000 rpm the supply cut off to the compressor only lasts 8 seconds, after which it is restored.

## Engine fan control:

When the car is travelling at low speed, dynamic air cooling on the condenser lowers and it is necessary to engage the fan that cools the engine radiator and the condenser. This takes place through the 4-level pressure switch which prevents an increase of the pressure at the condenser: the engine fan is initially engaged at first speed (level of appr. 15 bar) then, at second speed (level of appr. 20 bar).

## Fuses and relays:

The system fuses and relays are grouped as follows:

- next to the fusebox **G1**: 30A fuse **G255** (only **G1**, B), 10A fuse **Q65**, relay **I78** (only **G1**, B), relay **I99** (only **G1**, B), relay **Q22** (only TD);
- in the "maxi fuse" box **G56**: 50A fuse **G254**;
- on the fan duct: relay **I100** (only TD);
- next to the i.e. fuses and relays i.e. (only petrol version): relays **Q22** and **I100**;

For further details concerning this system, refer to Group 50 "CLIMATE CONTROL".

# RECIRCULATION AND AIR TEMPERATURE FAN CONTROL

## Wiring Diagram

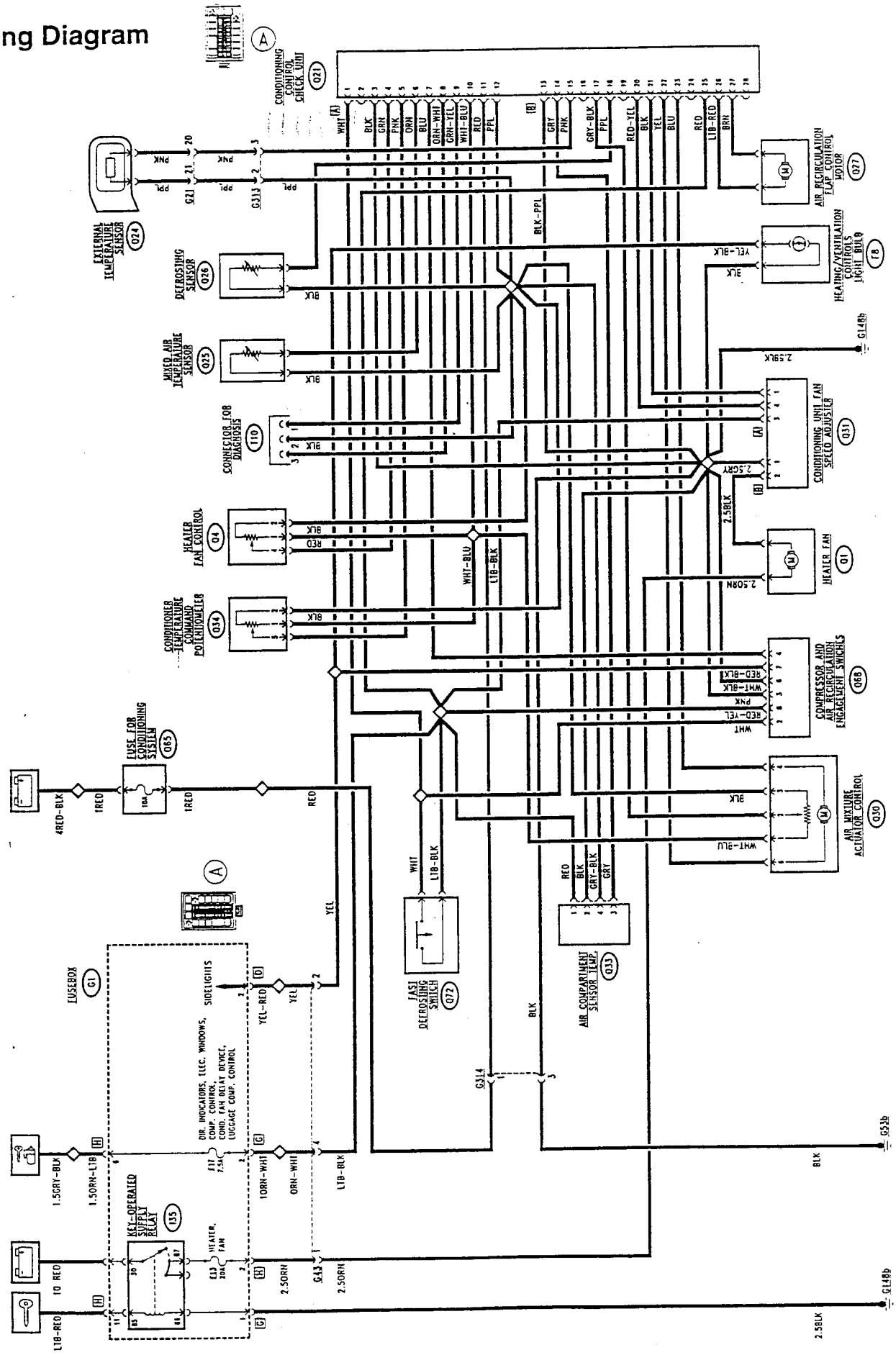

## Wiring Diagram

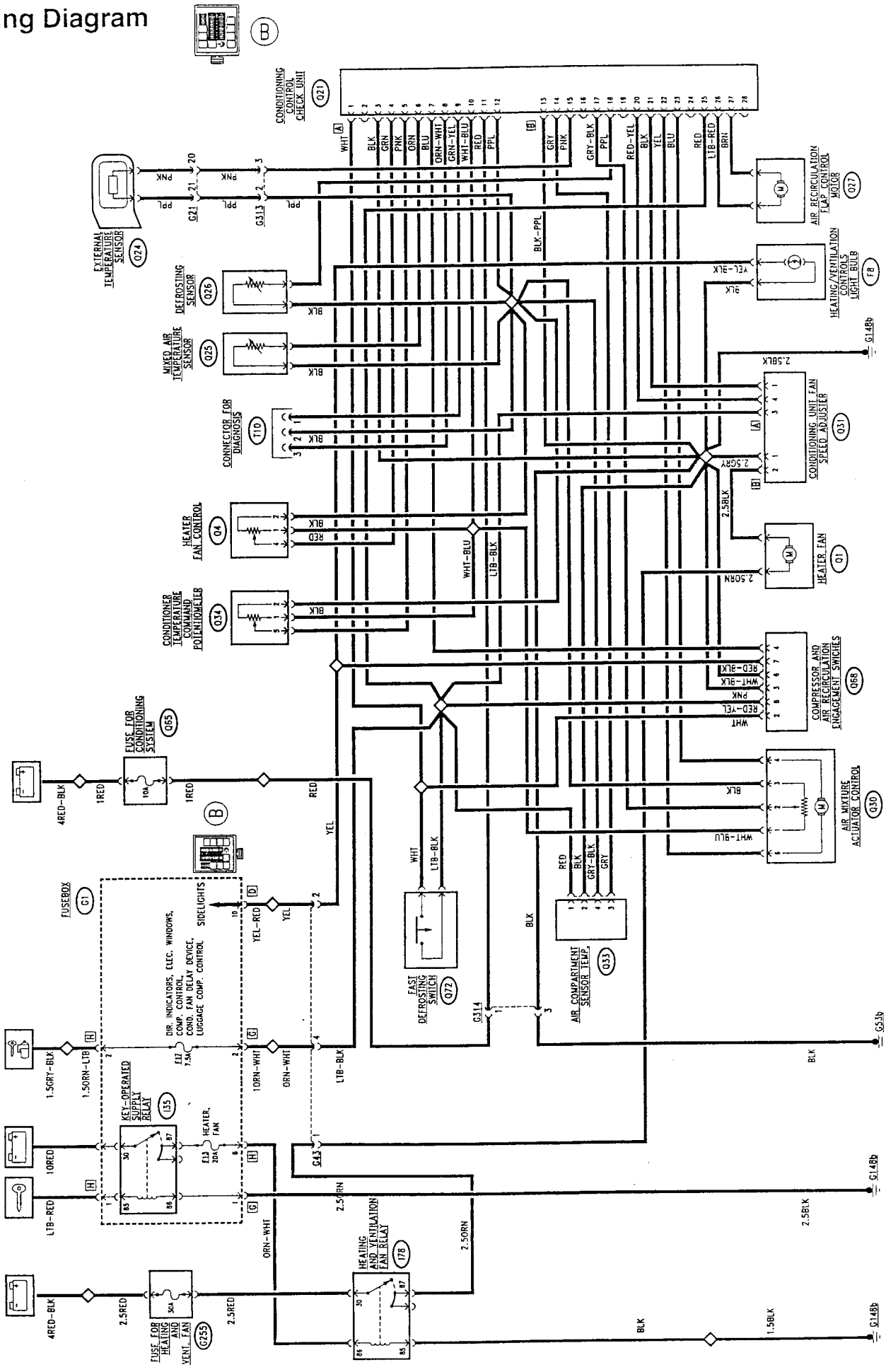

## Wiring Diagram

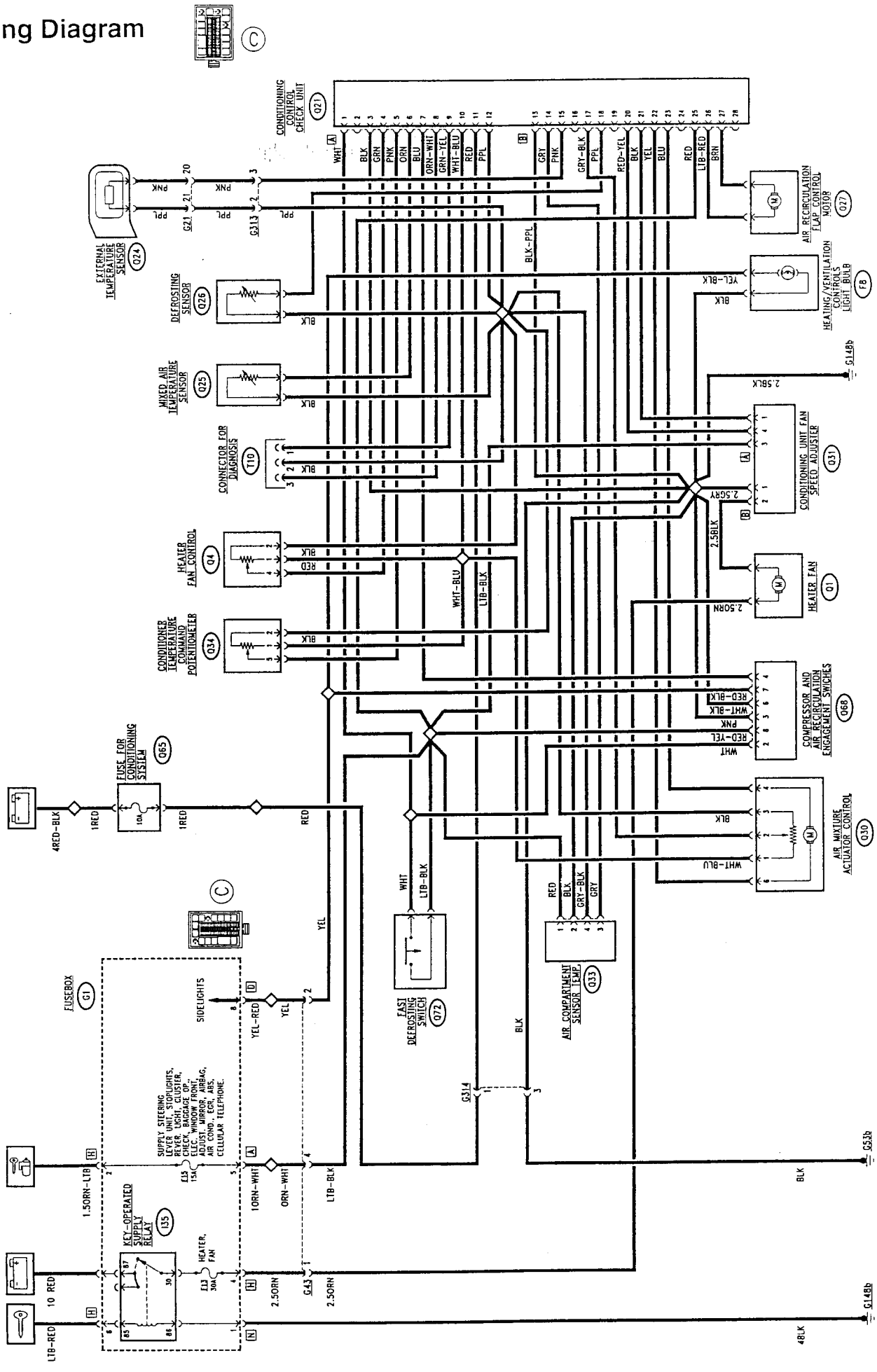

## Functional Description

The electronic control unit automatically operates the system controlling the thermodynamic parameters in order to provide the climatic comfort (temperature and humidity) required by the occupants of the car.

The control unit **Q21** is supplied directly at pin 11 by the line of wander fuse **Q65**; the key-operated supply reaches pin 25 by the line of fuse **F17** of **G1** (box "A") or fuse **F15** (box "C"). Pin 3 and 13 are at earth (**G148b**).

The outside temperature sensor **Q24** is on the right wing mirror: it is an NTC sensor connected to pin 15 of **Q21** and connected to the reference earth at pin 12 of **Q21**.

The antifrost sensor **Q26** is inside the duct/distributor unit near the evaporator: it is an NTC sensor connected to pin 18 of **Q21** (reference earth at pin 12).

The treated air temperature sensor **Q25** is inside the duct/distributor unit upstream of the distribution ports: this is an NTC sensor connected to pin 6 of **Q21** (reference earth at pin 12).

The fan control potentiometer **Q4** is connected with the corresponding knob : it is supplied by the control unit with 5V (pin 10) and reference earth (pin 12) and returns a signal corresponding to the different positions of the knob (pin 4).

The required temperature control potentiometer **Q34** is connected with the corresponding knob: it is supplied by the control unit with 5V (pin 10) and the reference earth (pin 12) and returns a signal corresponding to the position of the knob (pin 5).

The "fast defrosting" switch **Q72** is on the distribution knob: this is an N.O. contact which sends a voltage signal (12V) to pin 1 of **Q21** and to the compressor switch **Q68**.

The pasenger compartment air temperature sensor **Q33** is on the dashboard, on the right of the steering wheel. This is an NTC sensor connected to pin 14 of **Q21**.

The sensor is "ventilated", i.e. it contains a small fan that is always supplied (line of **F17** box **G1** "A" - or **F15** for box **G1** "C" - and earth **G148b** and earth **G148b**) so that the temperature reading remains unaffected by the air stagnating inside the dashboard.

The mixing control actuator **Q30** is driven by the control unit of pin 22 and 23.
A motor supplied at 12V controls the rotary movement of a draw pin which acts directly on the mixing port. A potentiometer detects the position and acts as "feedback" to the control unit (pin 17).

The recirculation control actuator **Q27** is a motor supplied at 12V by pin 26 and 27 of **Q21** which turns the outside air inlet port in the two directions to the end of its stroke, without intermediate positions.

The fan **Q1** that sends outside or recirculation air to the duct-distributor is supplied at 12V by the special line of fuse **F13** of **G1** and it is controlled at different speeds continuouslt by an electronic regulator **Q31** near to it.

At the input, the electronic regulator **Q31** receives a control signal from the control unit - pin 20 and 21 - and converts it into an earth signal of variable power continuously so as to operate the fan accordingly.

Switches **Q68** enable engagement of the compressor and recirculation connecting to pin 25 and 7 of **Q21**; inside the set of switches the leds are lit when the sidelights are on, and also the whole control panel, through lights **F8** and the line of connector D of **G1**.

Lastly the diagnosis connector **T10**, near the control unit; connects to pin 8 and 9 of **Q21**.

PIN OUT Control unit

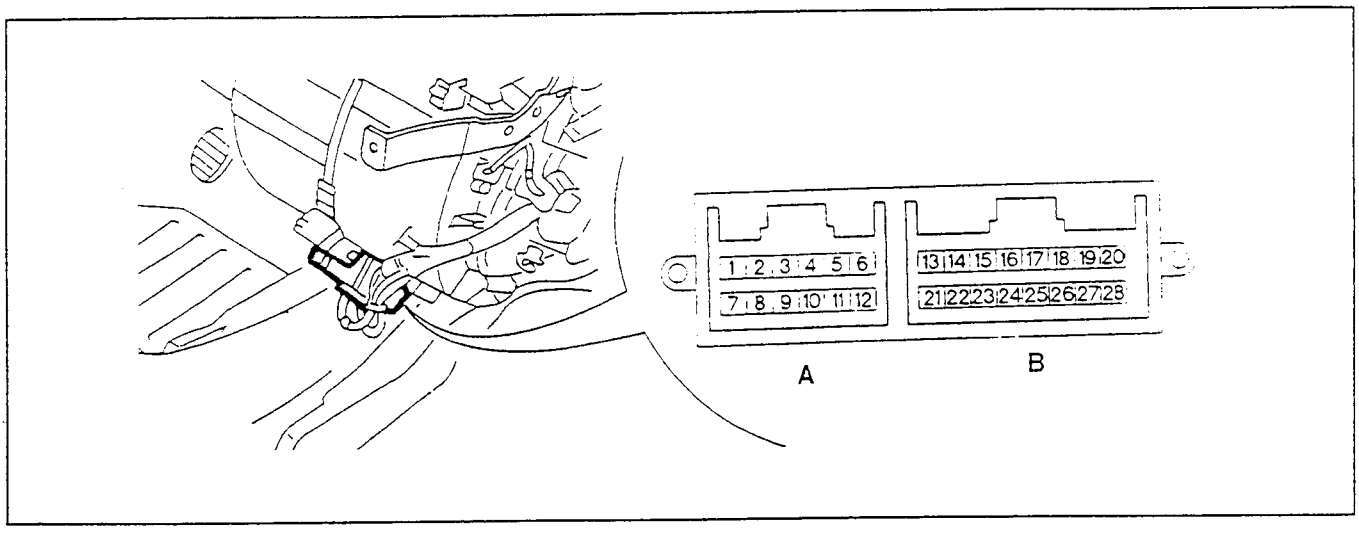


**CONNECTOR A**

| PIN | FUNCTION |
|---|---|
| 1 | "Fast defrosting" function |
| 2 | Compressor engagement |
| 3 | Earth |
| 4 | Fan control potentiometer |
| 5 | Required temperature adjustment potentiometer |
| 6 | Treated air temp. sensor |
| 7 | Recirculation engagement |
| 8 | Diagnosis line K |
| 9 | Diagnosis line L |
| 10 | Supply for potentiometers - 5V |
| 11 | Direct supply from battery |
| 12 | Earth for sensors |

**CONNECTOR B**

| PIN | FUNCTION |
|---|---|
| 13 | Earth |
| 14 | Passenger compartment temperature sensor |
| 15 | Outside temperature sensor |
| 16 | N.C. |
| 17 | Mixing actuator feed-back |
| 18 | Antifrost sensor |
| 19 | N.C. |
| 20 | Fan control |
| 21 | Earth for fan |
| 22 | Mixer control - 5V |
| 23 | Mixer control - 5V |
| 24 | Compressor control |
| 25 | Key supply |
| 26 | Recirculation engagement control- 5V |
| 27 | Recirculation shut off control - 5V |
| 28 | N.C. |

## Components and Connectors

| Climate control system controls lighting | F8 | Fusebox | G1 |
|---|---|---|---|

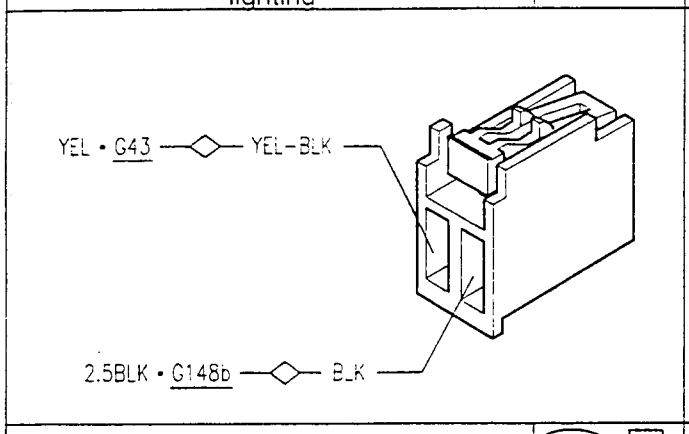


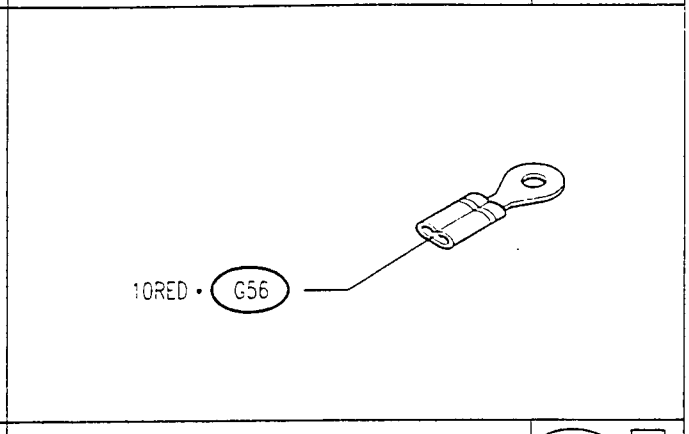


| Fusebox | G1 D | Fusebox | G1 D |
|---|---|---|---|

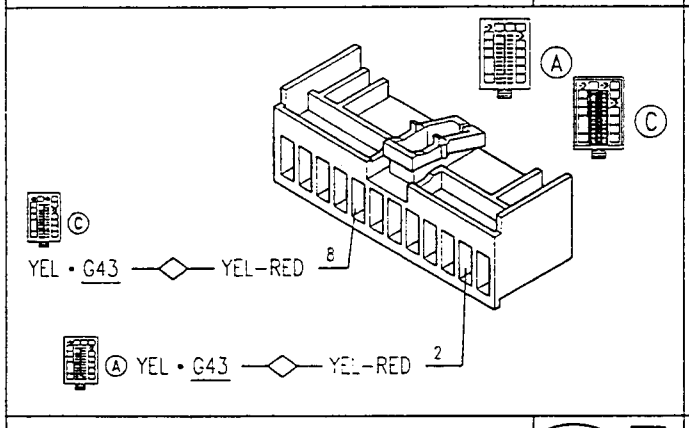


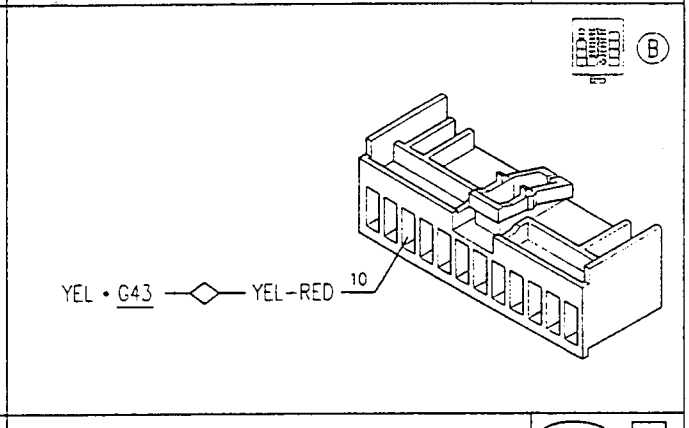


| Fusebox | G1 H | Fusebox | G1 H |
|---|---|---|---|

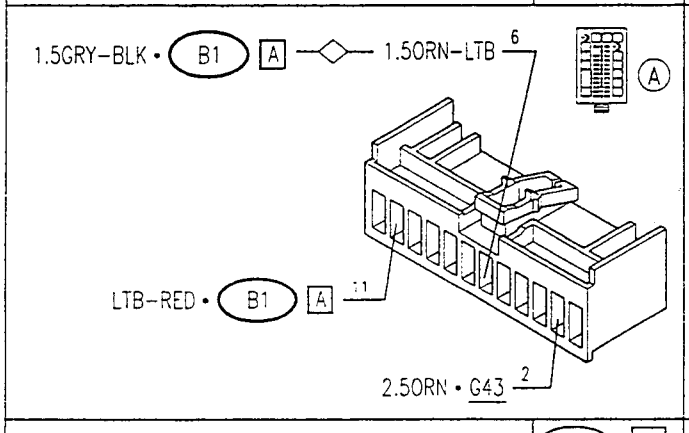


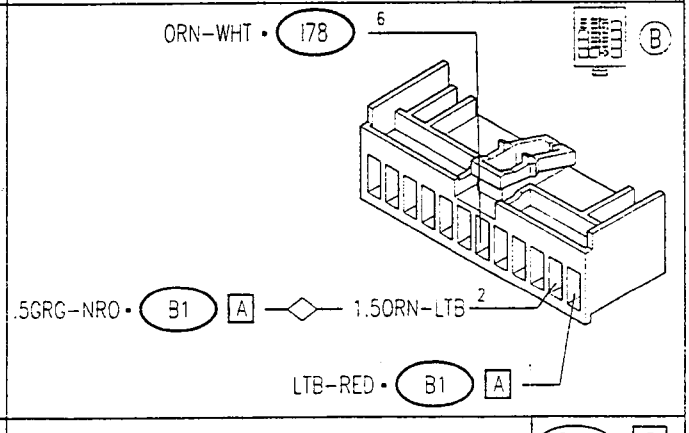


| Fusebox | G1 H | Fusebox | G1 G |
|---|---|---|---|

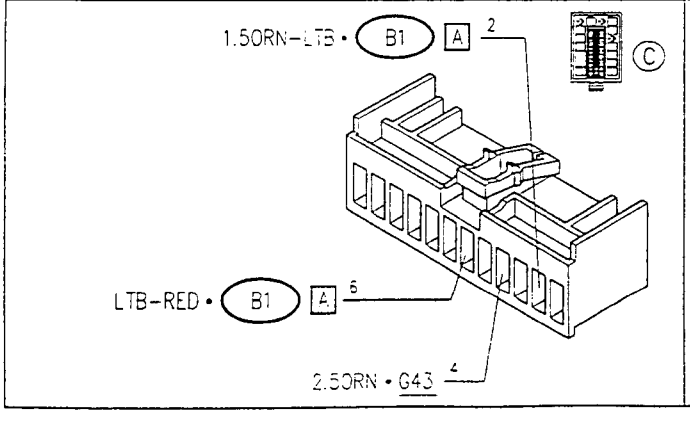


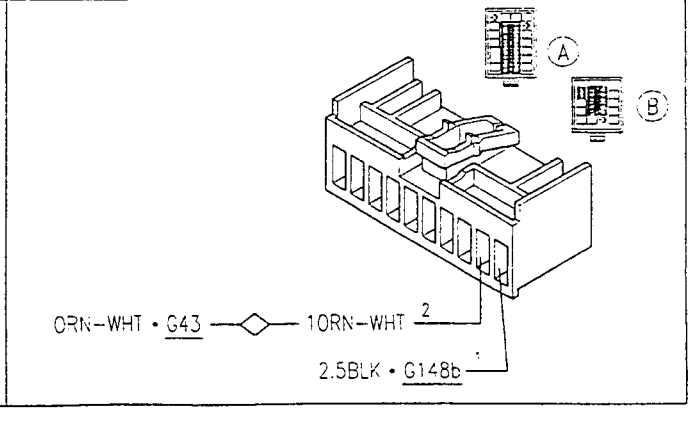

## Components and Connectors (continued)

| Fusebox | G1 N | RH front door wiring connector | G21 |
|---|---|---|---|

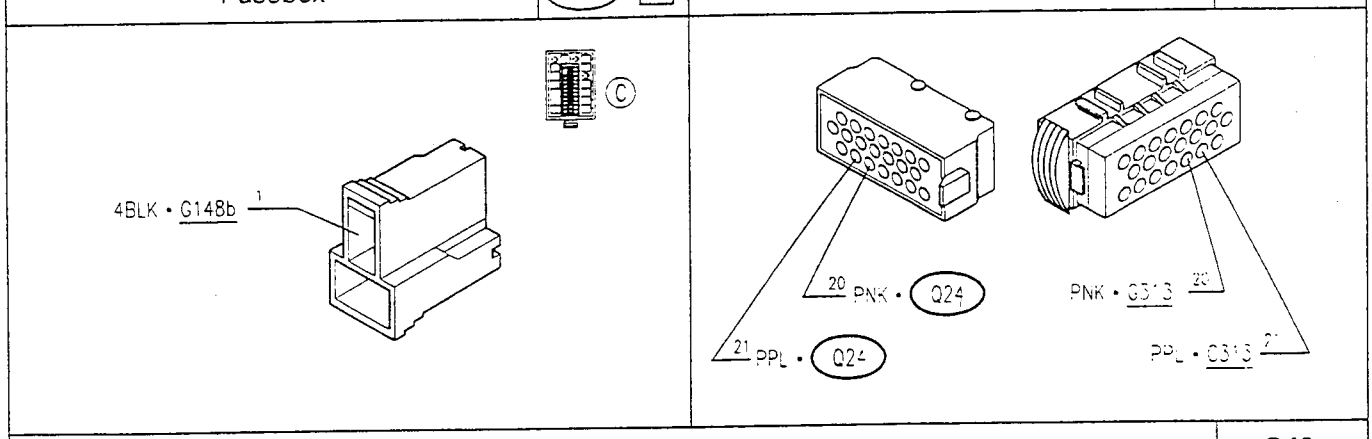


| Climate control system wiring connector | G43 |
|---|---|

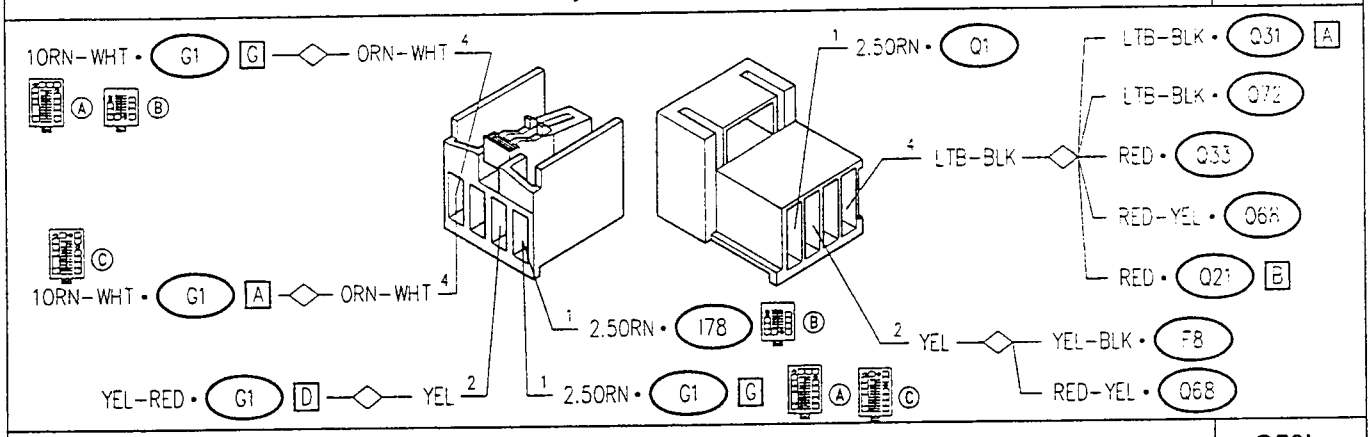


| LH engine compartment earth | G53b |
|---|---|

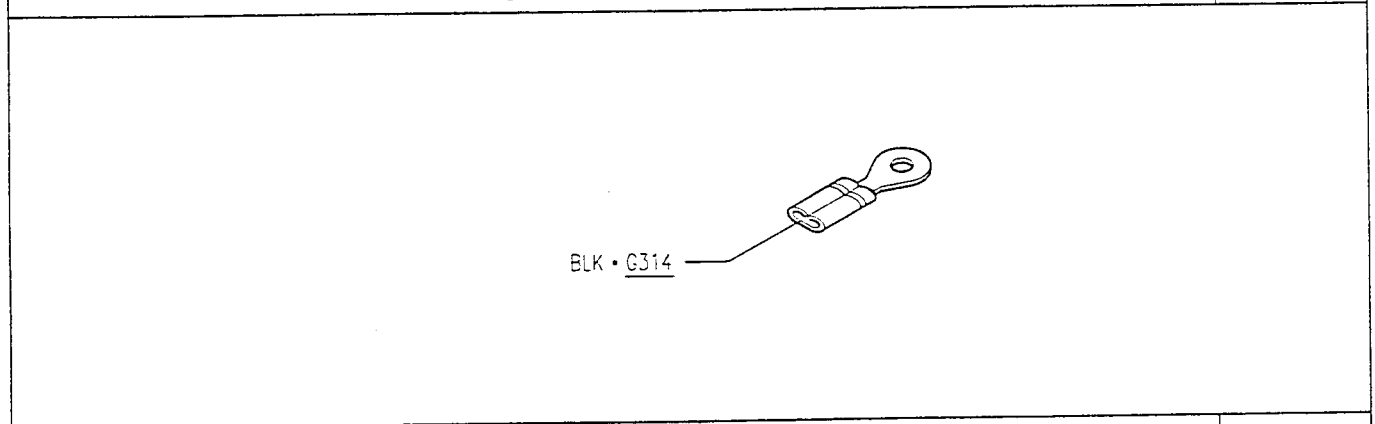


| Earth under LH dashboard | G148b |
|---|---|

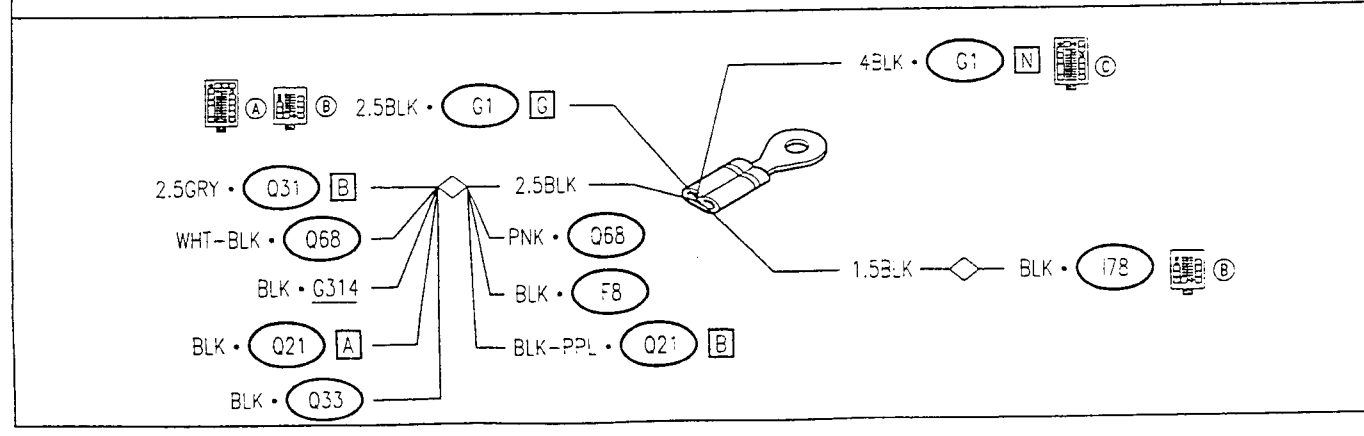

## Components and Connectors (continued)

| Climate control fan fuse | G255 | Conditioner additional wiring connector | G313 |
|---|---|---|---|

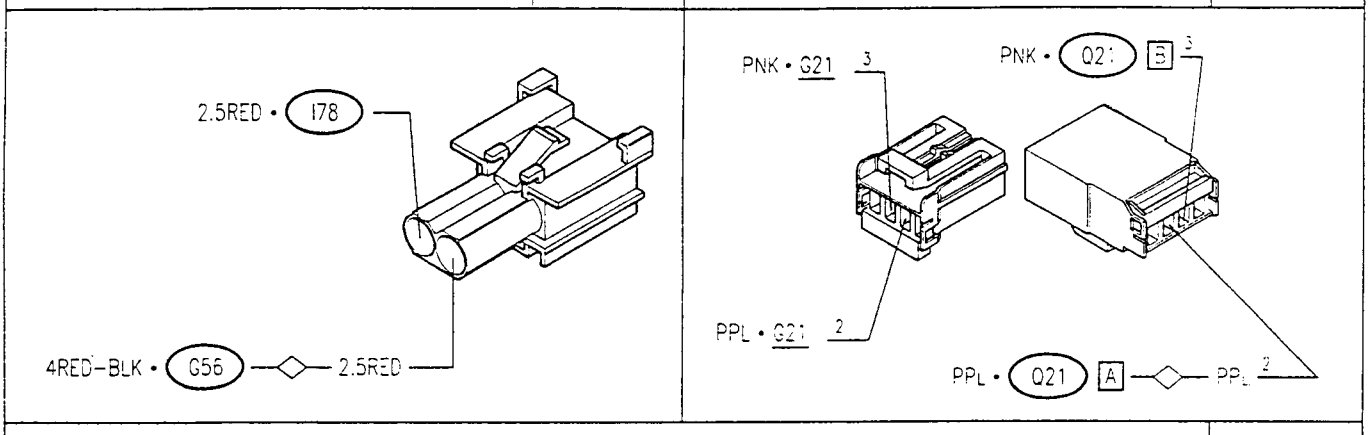


| Engine wiring/conditioner wiring connector | G314 |
|---|---|

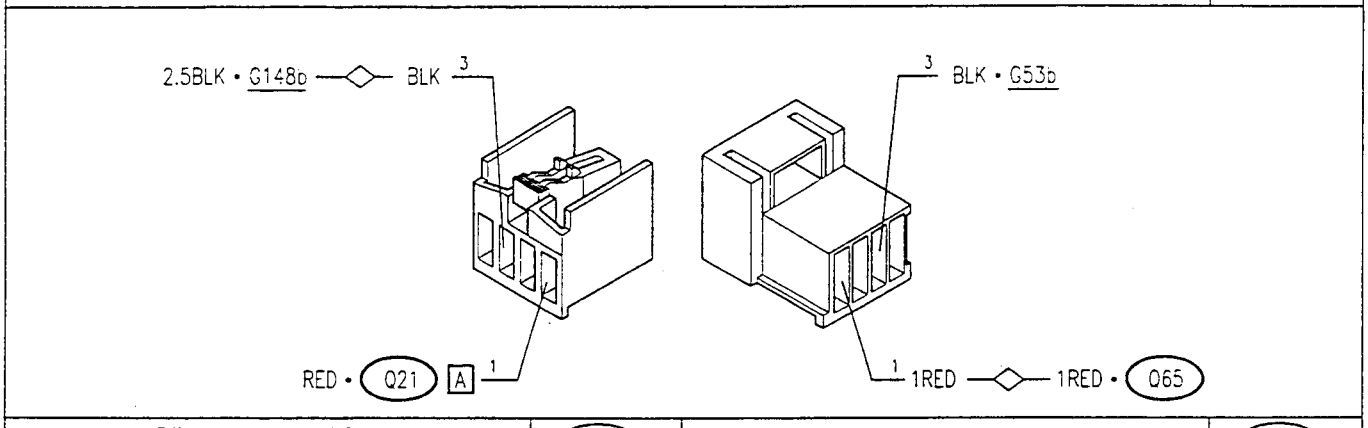


| Climate control fan relay | I78 | Climate control fan | Q1 |
|---|---|---|---|

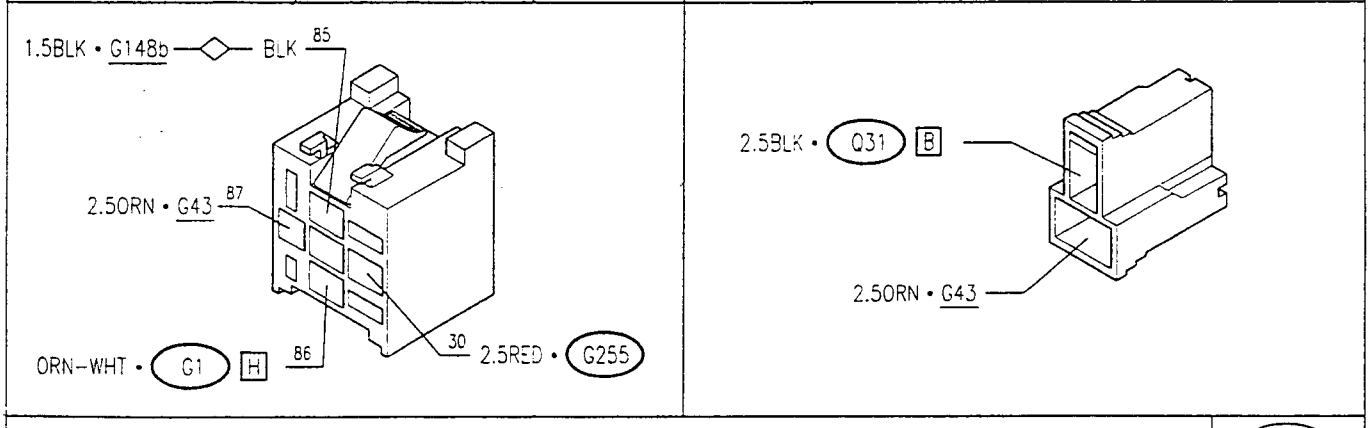


| Climate control fan control | Q4 |
|---|---|

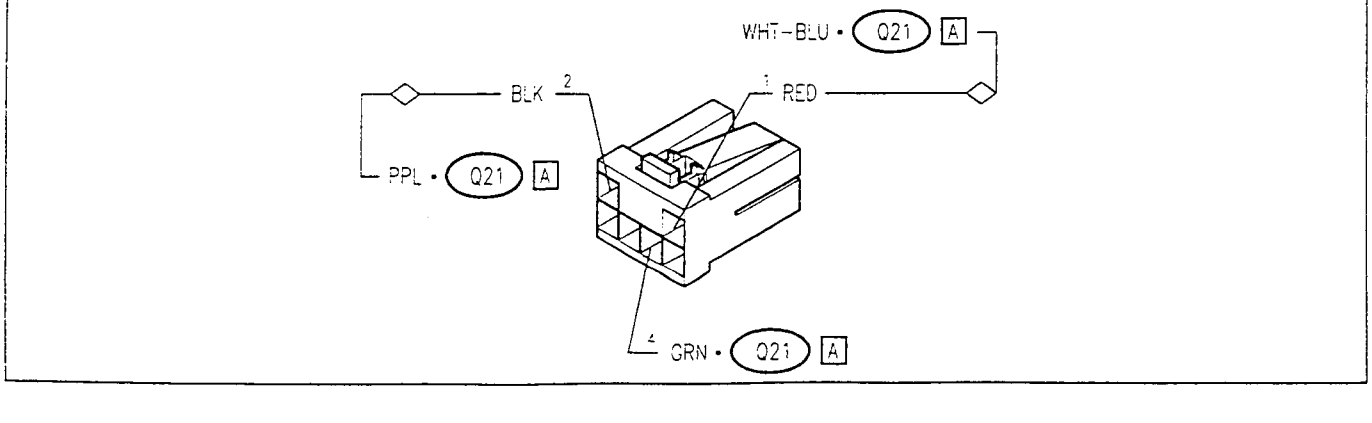

## Components and Connectors (continued)

### Climate control system control unit — Q21 A

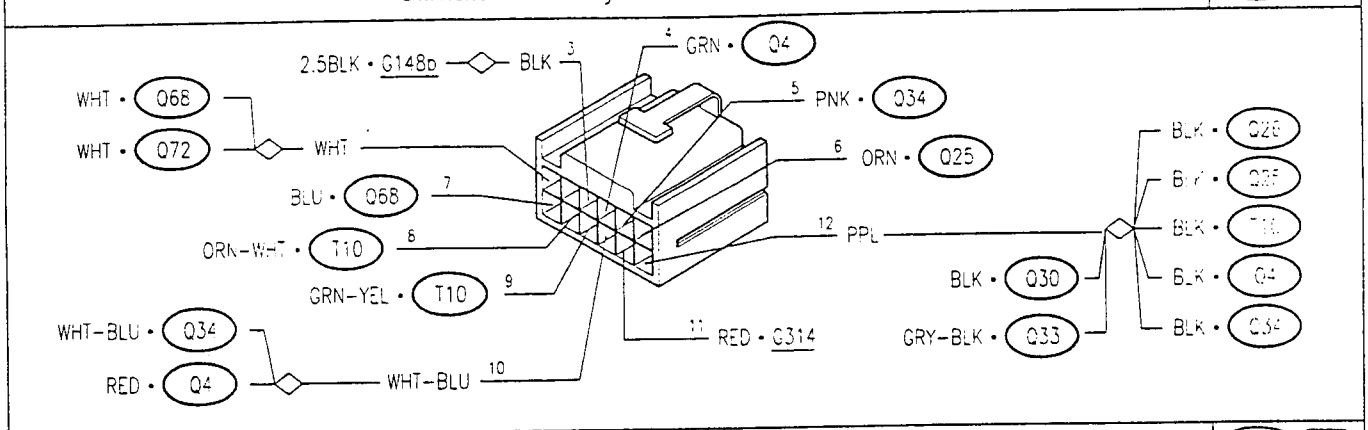


### Climate control system control unit — Q21 B

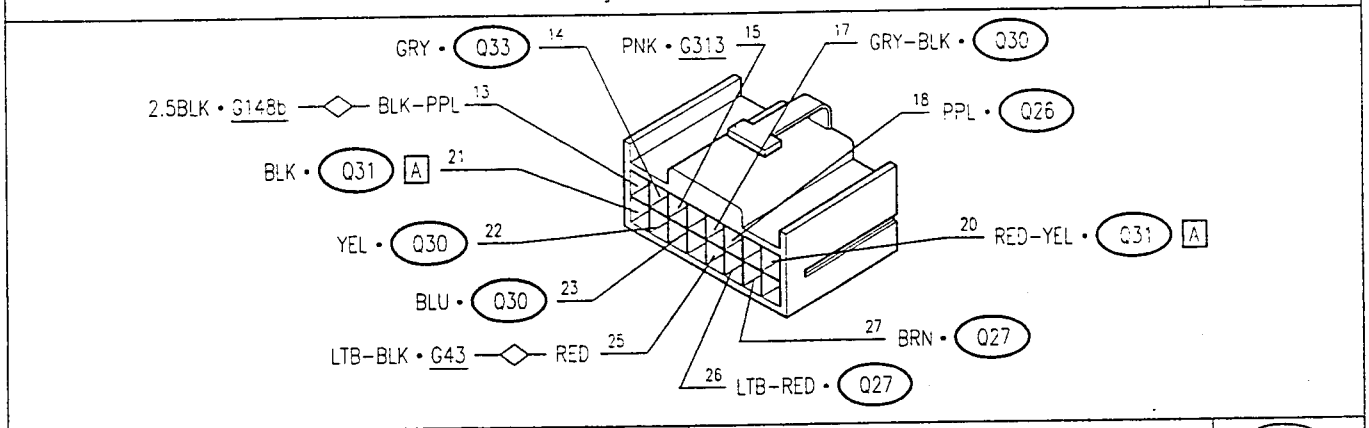


### Outside temperature sensor — Q24

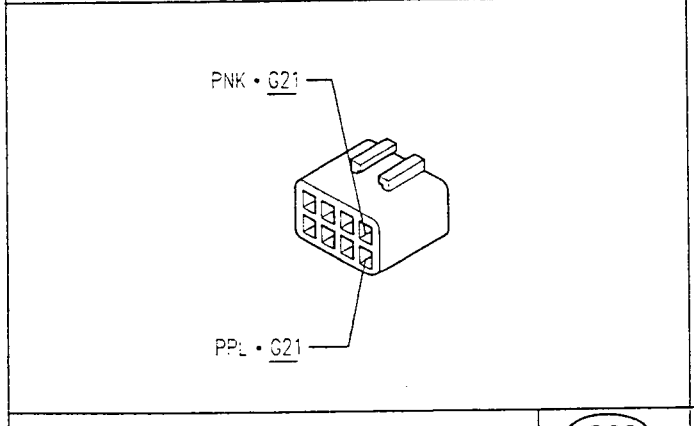


### Treated air temperature sensor — Q25

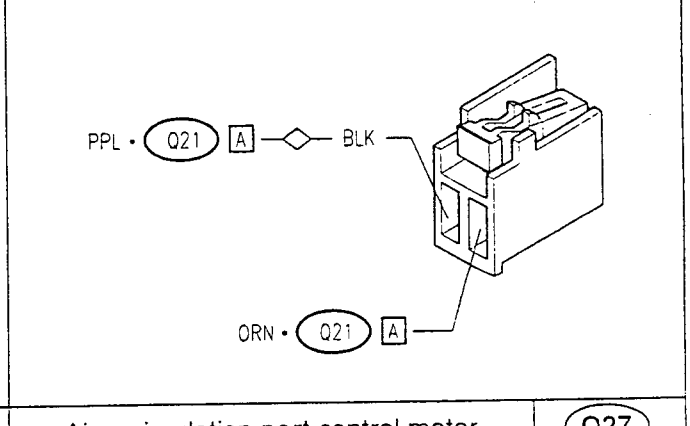


### Antifrost sensor — Q26

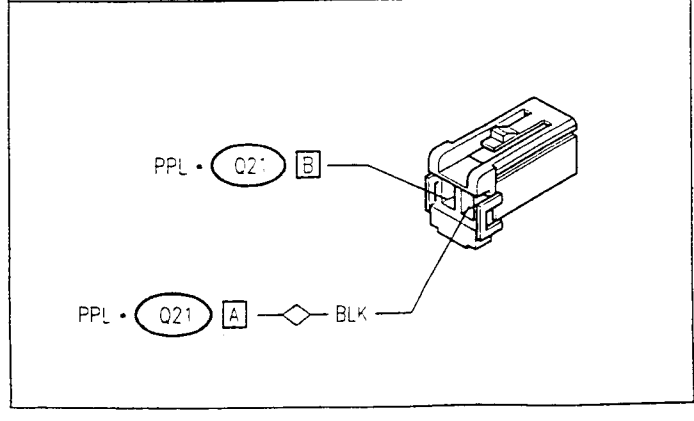


### Air recirculation port control motor — Q27

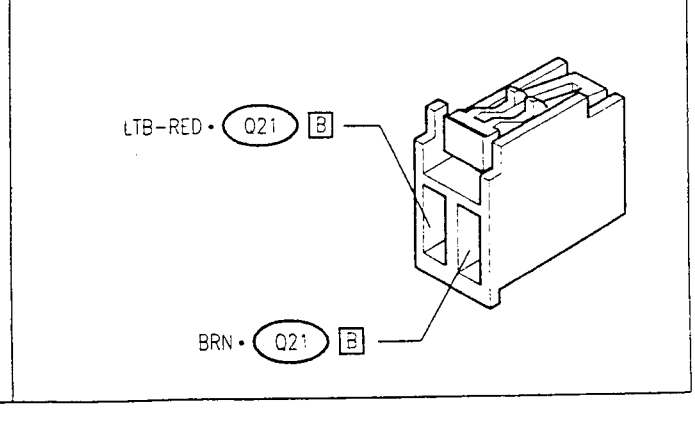

## Components and Connectors (continued)

### Air mixing control motor — Q30

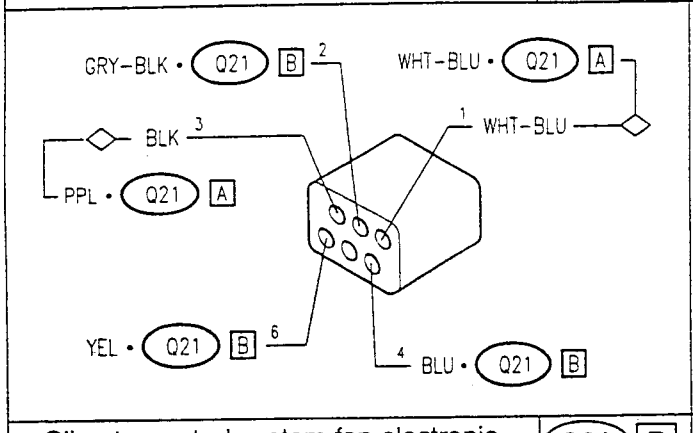


### Climate control system fan electronic regulator — Q31 A

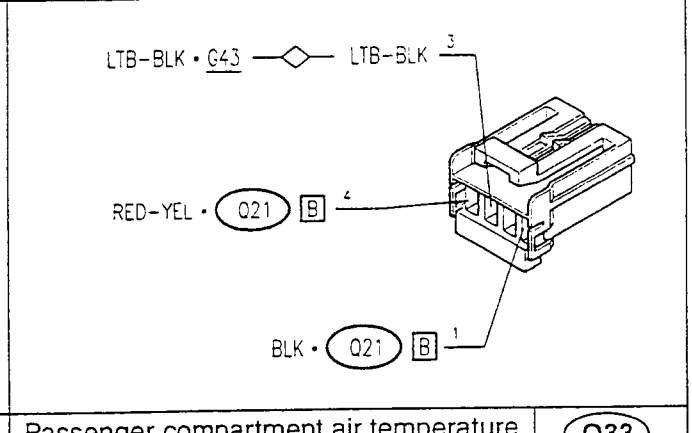


### Climate control system fan electronic regulator — Q31 B

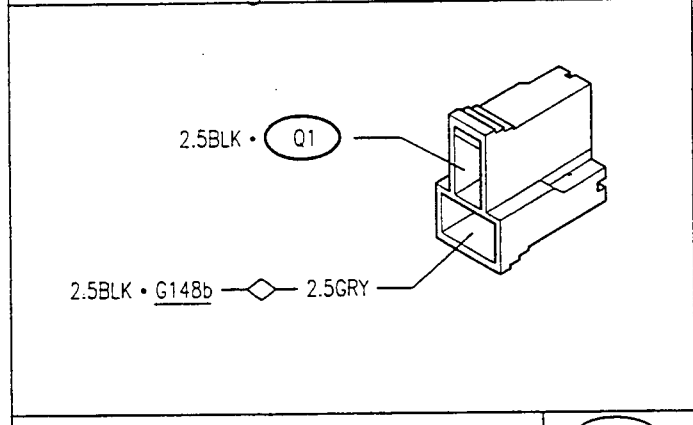


### Passenger compartment air temperature sensor — Q33

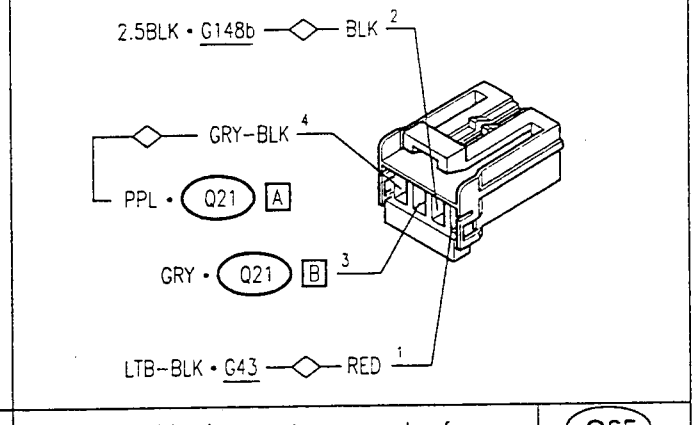


### Required air adjustment control — Q34

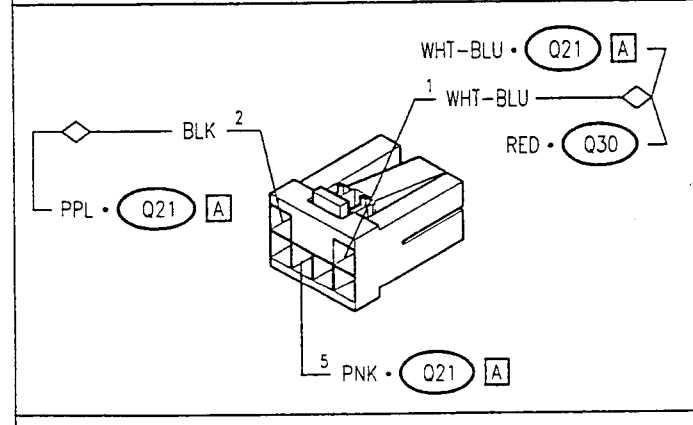


### Air conditioning system wander fuse — Q65

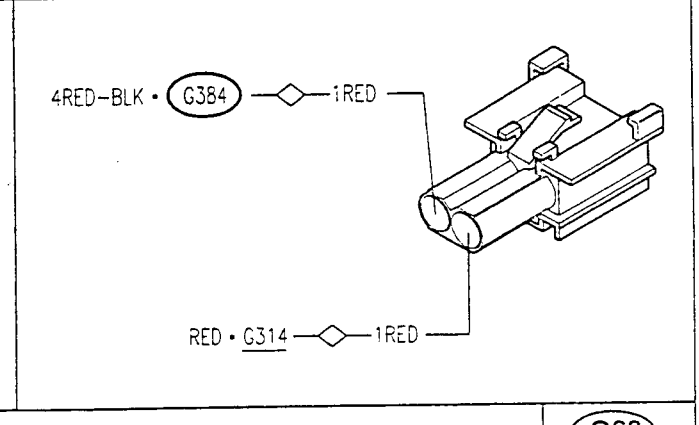


### Compressor and air recirculation switches — Q68

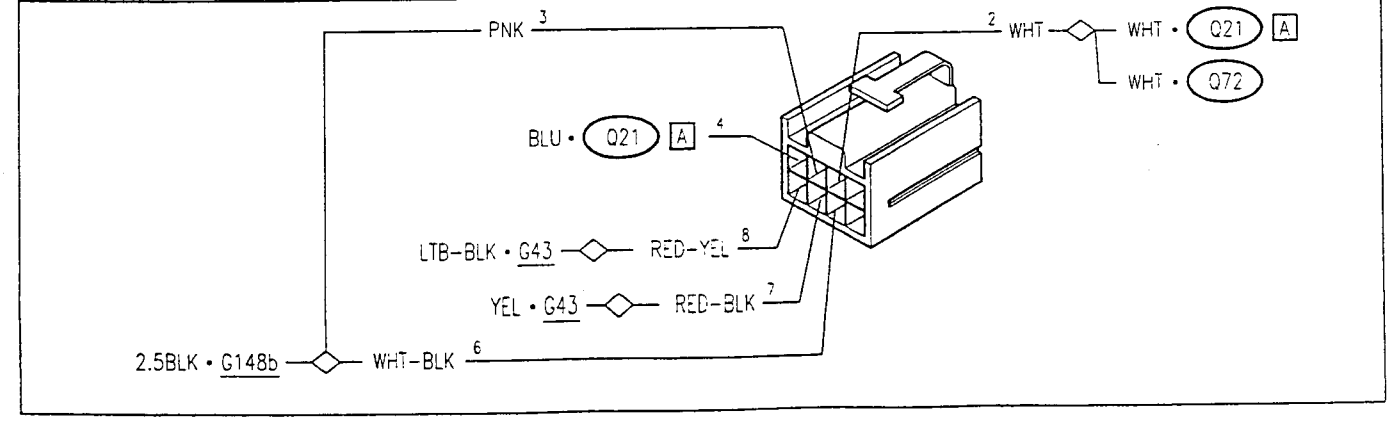

## Components and Connectors (continued)

| Fast defrosting switch | Q72 | Connector for ALFA TESTER (air conditioner) | T10 |
|---|---|---|---|
| 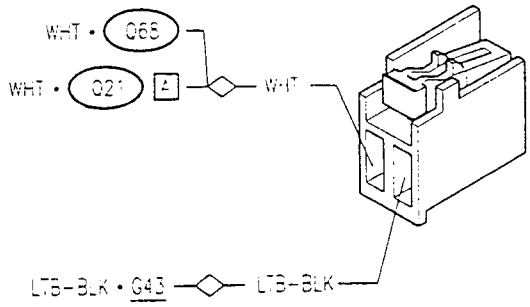 | | 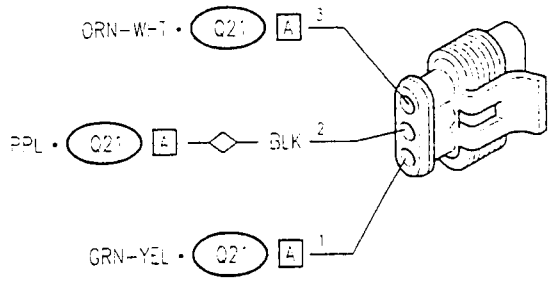 | |

# COMPRESSOR ENGAGEMENT (Petrol version)

## Wiring Diagram

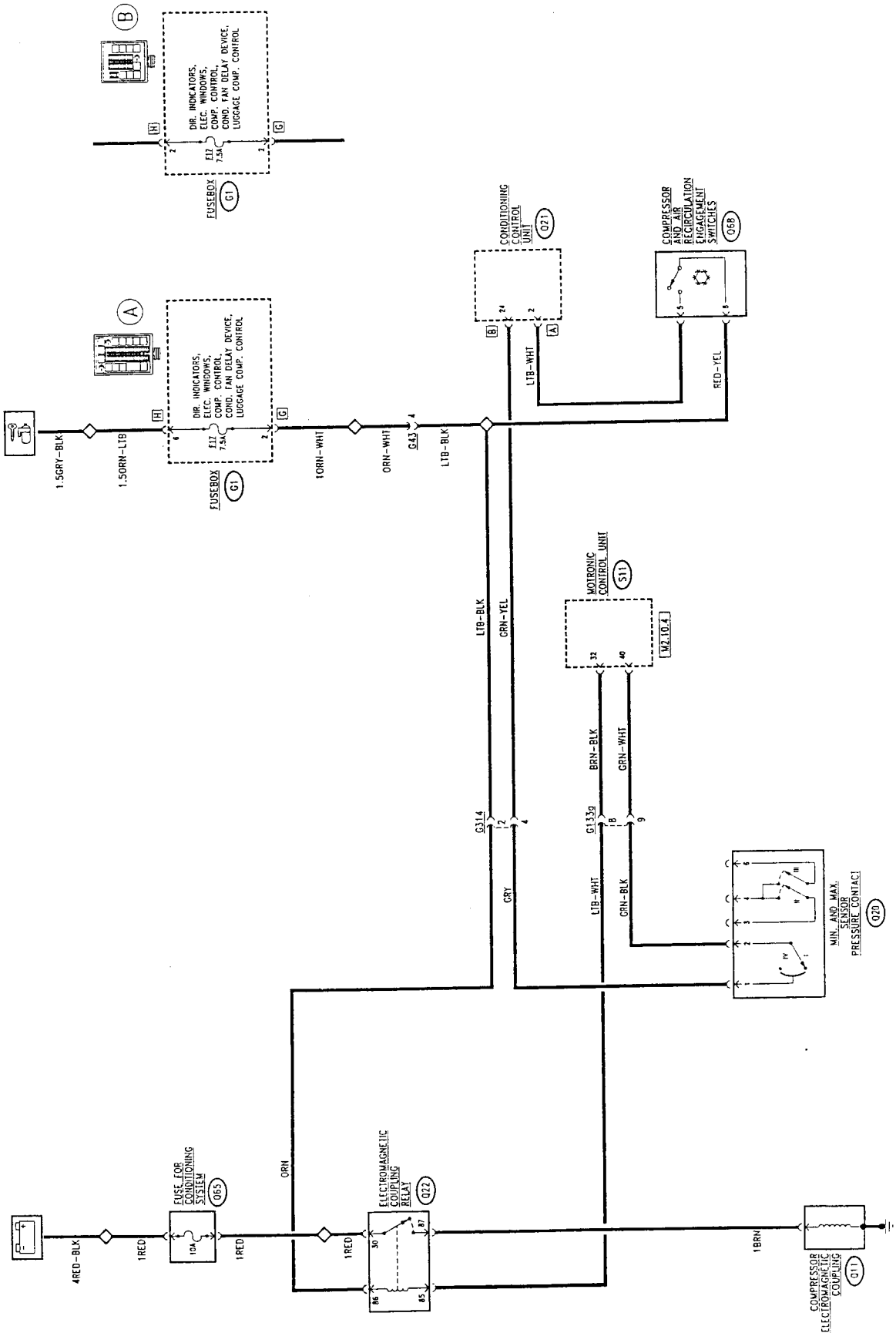

## Wiring Diagram (M.Y. '97 and M.Y. '98)

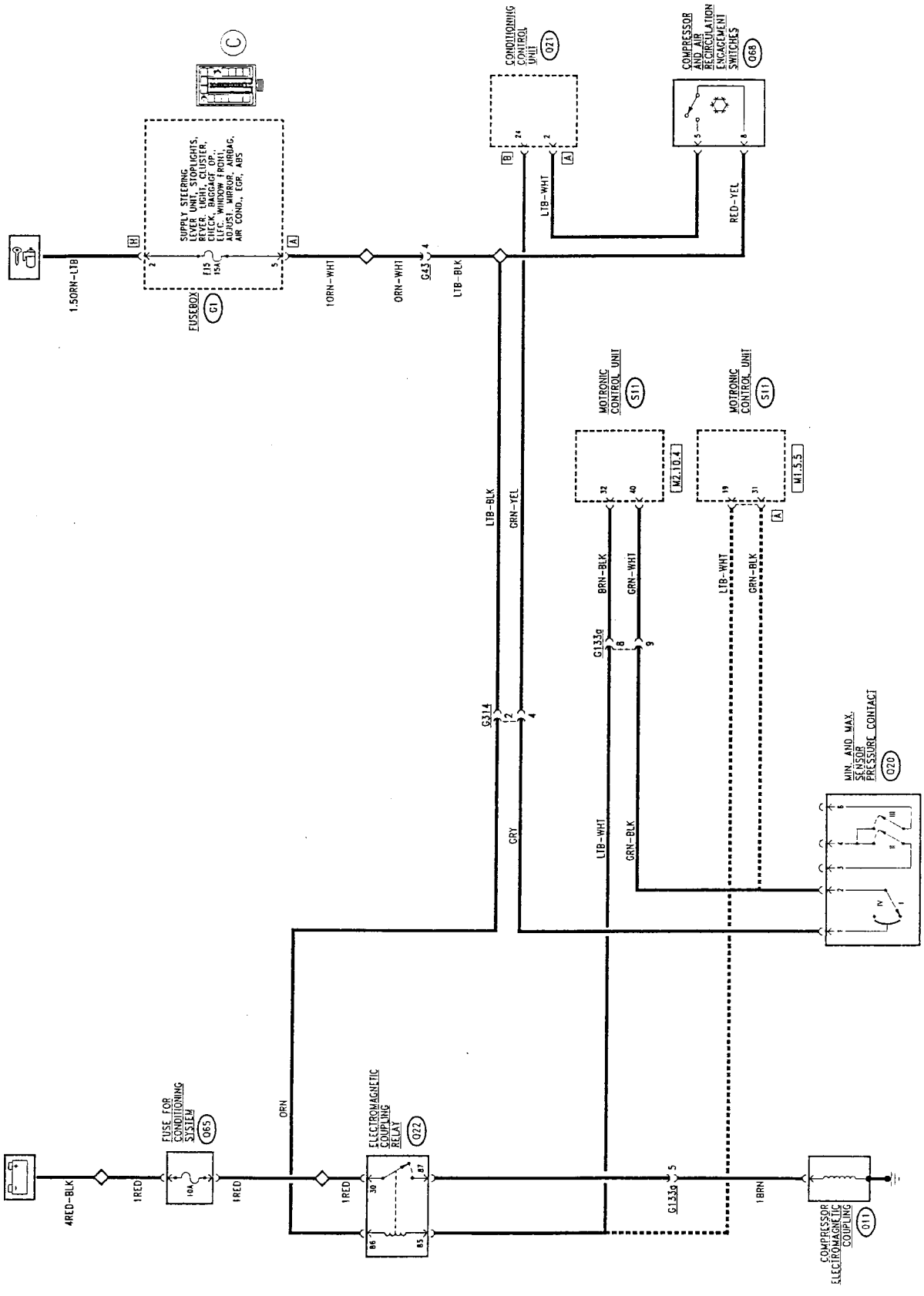

## Functional Description

The electromagnetic joint that operates the compressor **Q11** is controlled by relay **Q22** next to the relays and fuses of the injection/ignition system.

The coil of relay **Q22** receives the key-operated supply (line protected by fuse **F17** of **G1** (box "A") or fuse **F15** (box "C"); conversely the power line is supplied by battery current via wander fuse **G65**.

Relay **Q22** is energised, and consequently supplies to 12V current to the electromagnetic joint **Q11**, according to the following logic managed by the M2.10.4 injection - ignition control unit, which is connected with the air conditioning system through:

- pin 40 which receives the request signal to turn the system on from the air conditioning system;
- pin 32 from which a "low" (earth) signal leads which controls the relay **Q22** for engaging the conditioner compressor **Q11**.

A special logic enables this engagement, as follows:

- it adapts idle speed to compensate the increase in absorbed power due to compressor engagement;
- if the engine needs high power (high throttle opening speed), full load, or high engine temperature, it momentaneously cuts off compressor engagement.

The positive signal leading from the compressor engagement switch **Q68** crosses the control unit **Q21** which comes into action in the following conditions:

- low outside temperature: (disengagement below 4°C and re-engagement above 6°C);
- low mixed air temperature (disengagement below 3.5°C and re-engagement above 5°C).

The same signal also crosses the pressure switch **Q20** which cuts in if the pressure of the cooling system is too high or too low: in this case the signal does not reach the control unit which does not command compressor engagement.

## Components and Connectors

| Fusebox | G1 A |
|---|---|

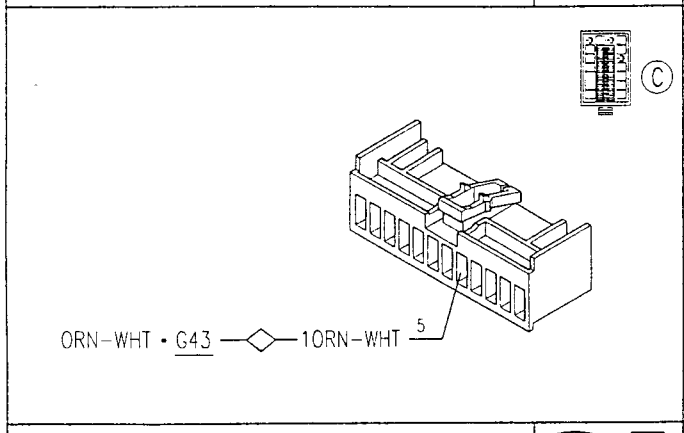


| Fusebox | G1 G |
|---|---|

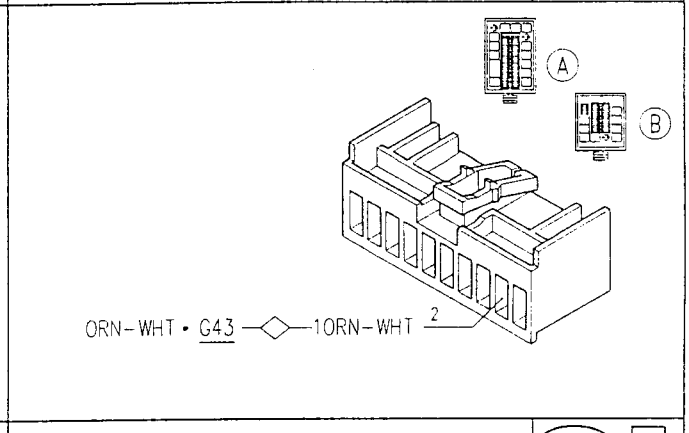


| Fusebox | G1 H |
|---|---|

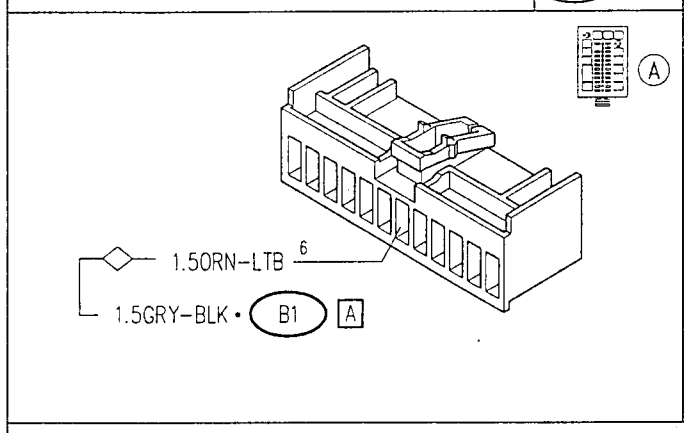


| Fusebox | G1 H |
|---|---|

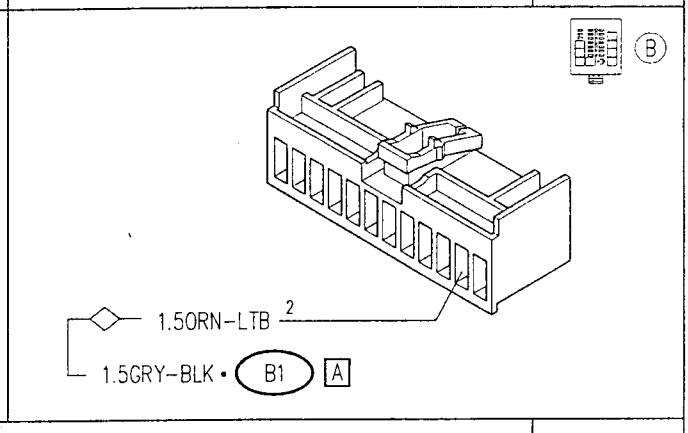


| Climate control system controls connector | G43 |
|---|---|

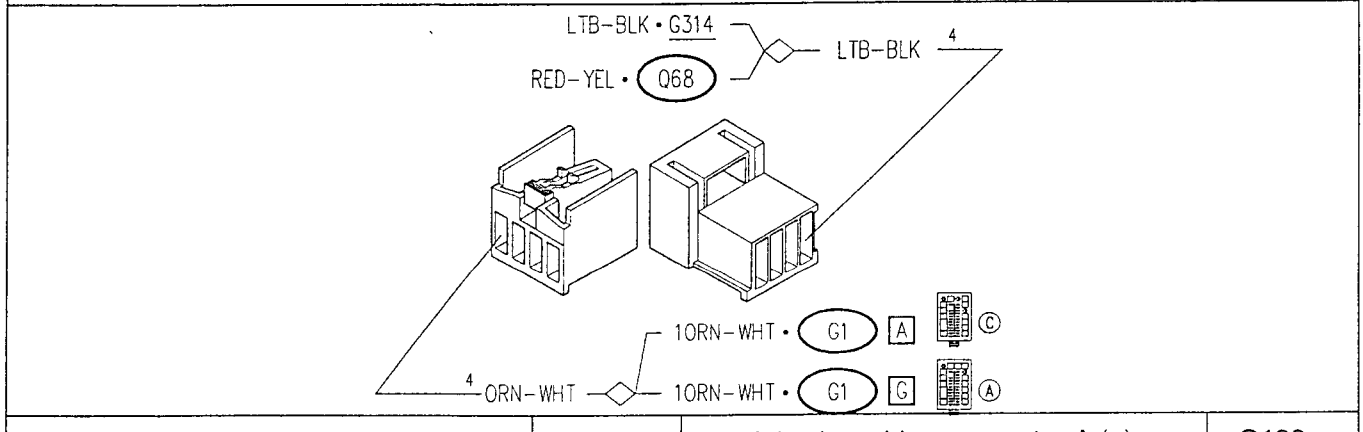


| Injection wiring connector A (*) | G133a |
|---|---|

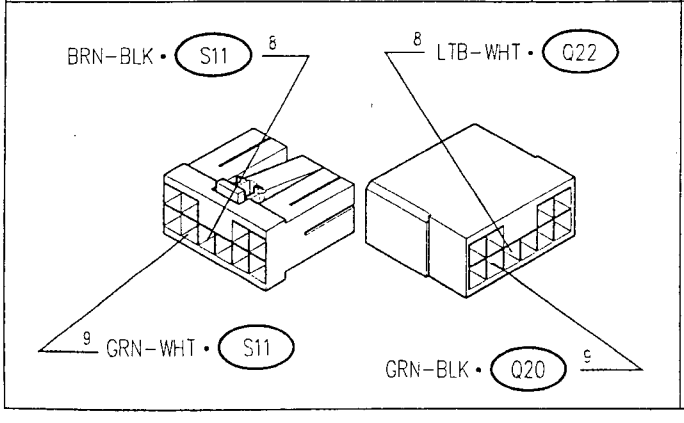


| Injection wiring connector A (•) | G133a |
|---|---|

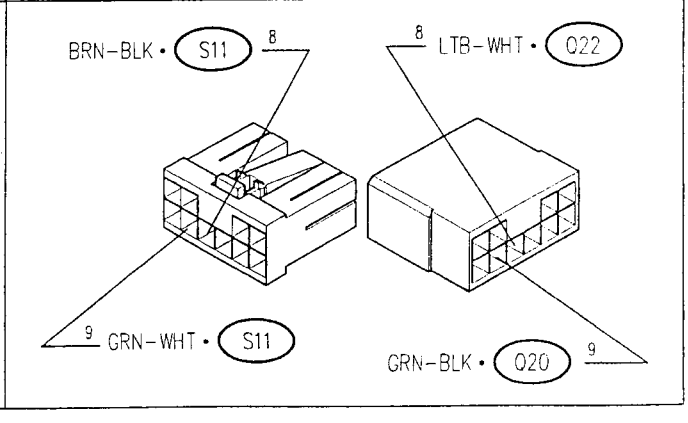


(*) only M2.10.4
(•) M1.5.5.

## Components and Connectors (continued)

| Engine wiring/conditioner wiring connector | G314 |
|---|---|

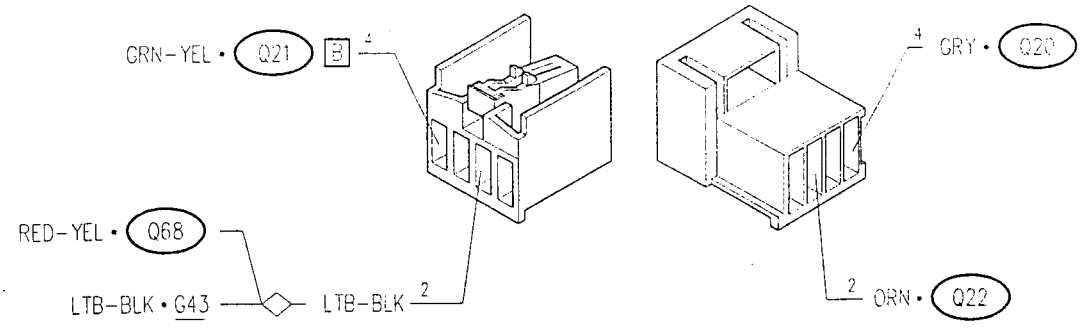


| Compressor electromagnetic joint | Q11 |
|---|---|

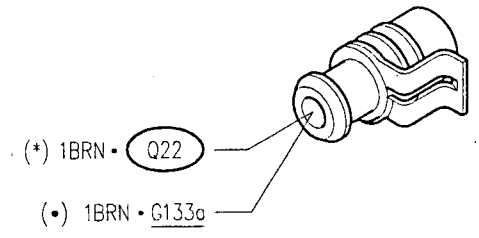


| Min. and max. sensor pressure contact | Q20 |
|---|---|

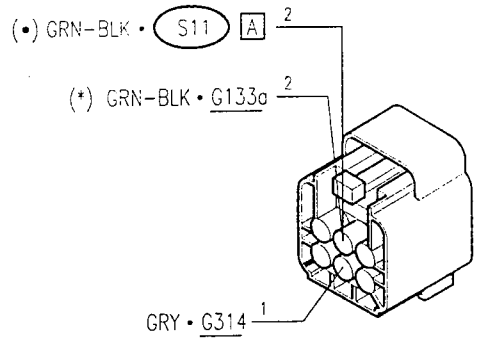


| Climate control unit | Q21 A |
|---|---|

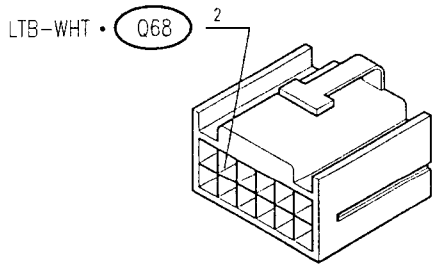


| Climate control unit | Q21 B |
|---|---|

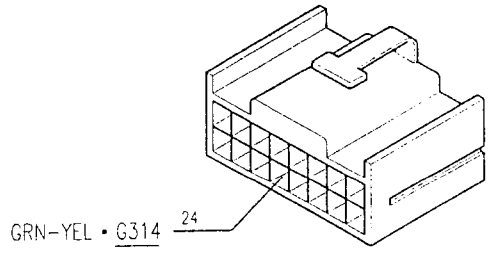


| Electromagnetic joint control relay | Q22 |
|---|---|

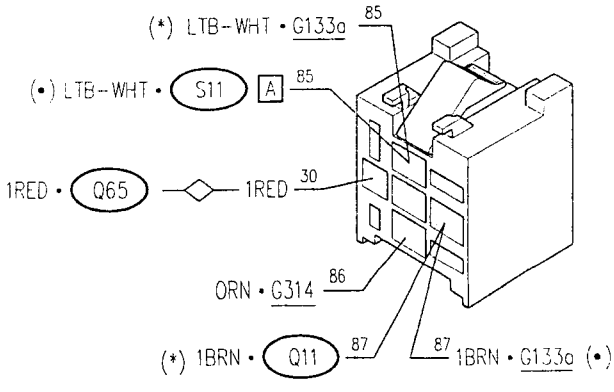


| Air conditioning system wander fuse | Q65 |
|---|---|

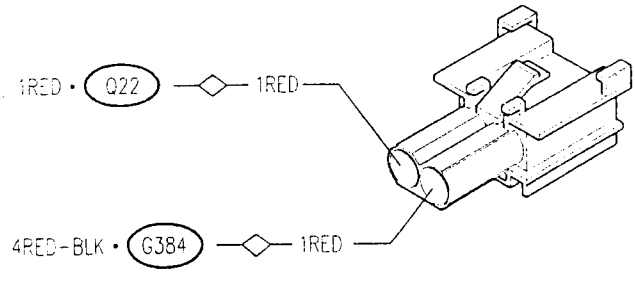


(*) only M2.10.4 (•) M1.5.5

## Components and Connectors (continued)

| Compressor and air recirculation switches | Q68 |
|---|---|

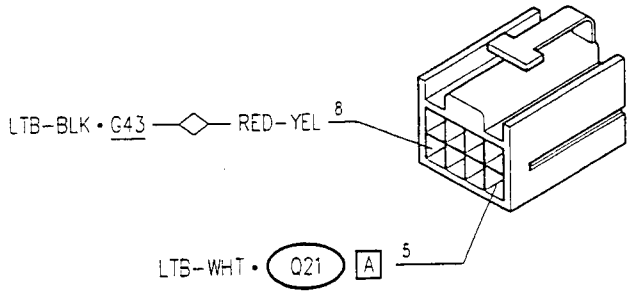


| Motronic control unit | S11 |
|---|---|

32 BRN-BLK • G133a

40 GRN-WHT • G133a

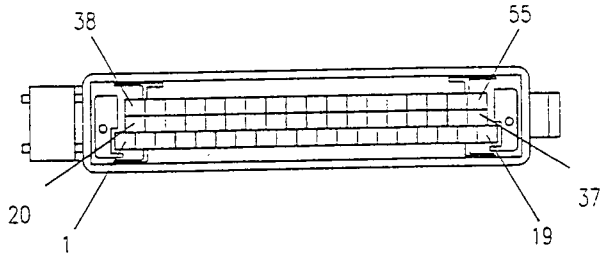

# COMPRESSOR ENGAGEMENT (TD version)

## Wiring Diagram

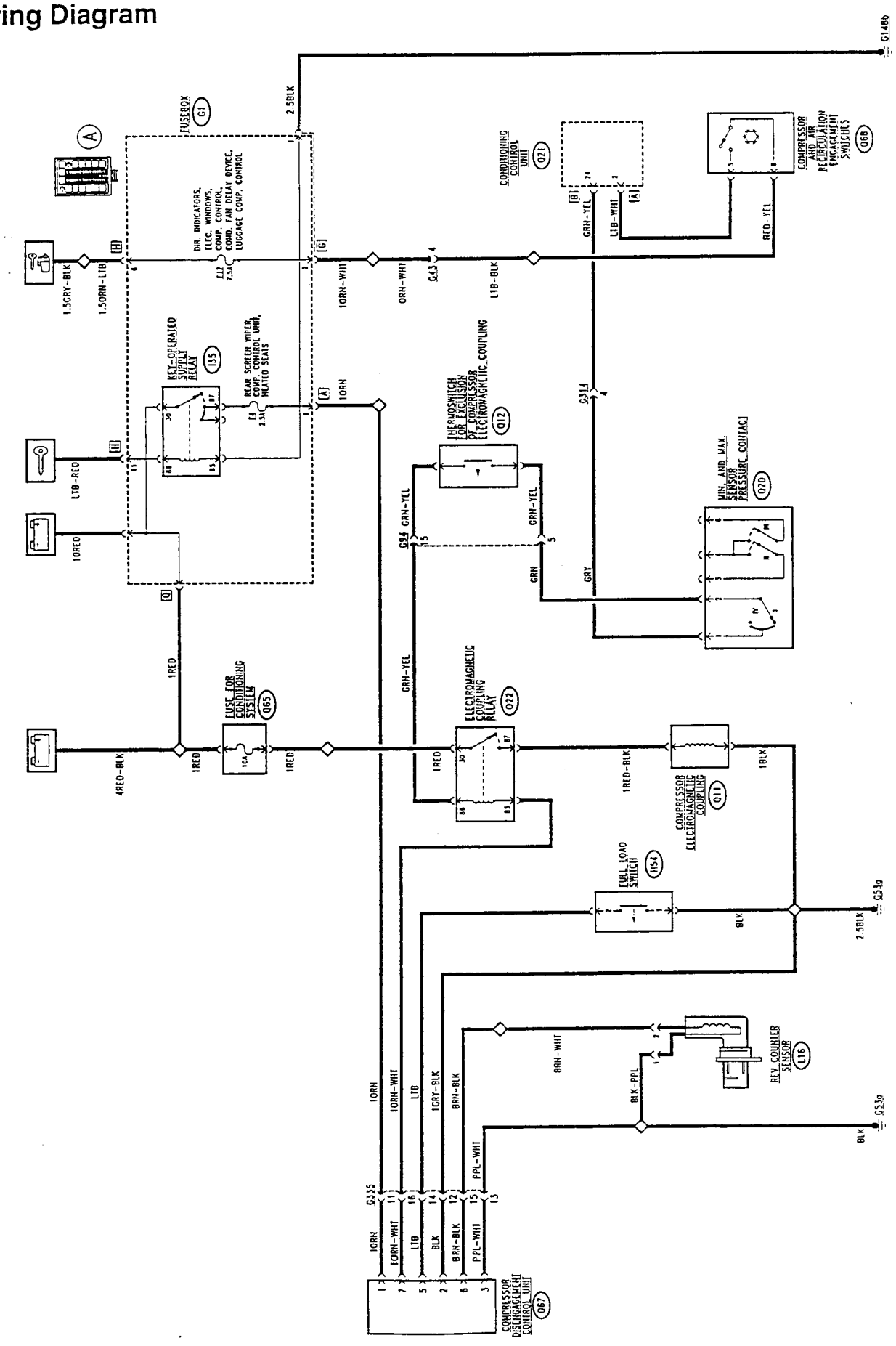

## Wiring Diagram (TD-CAT version)

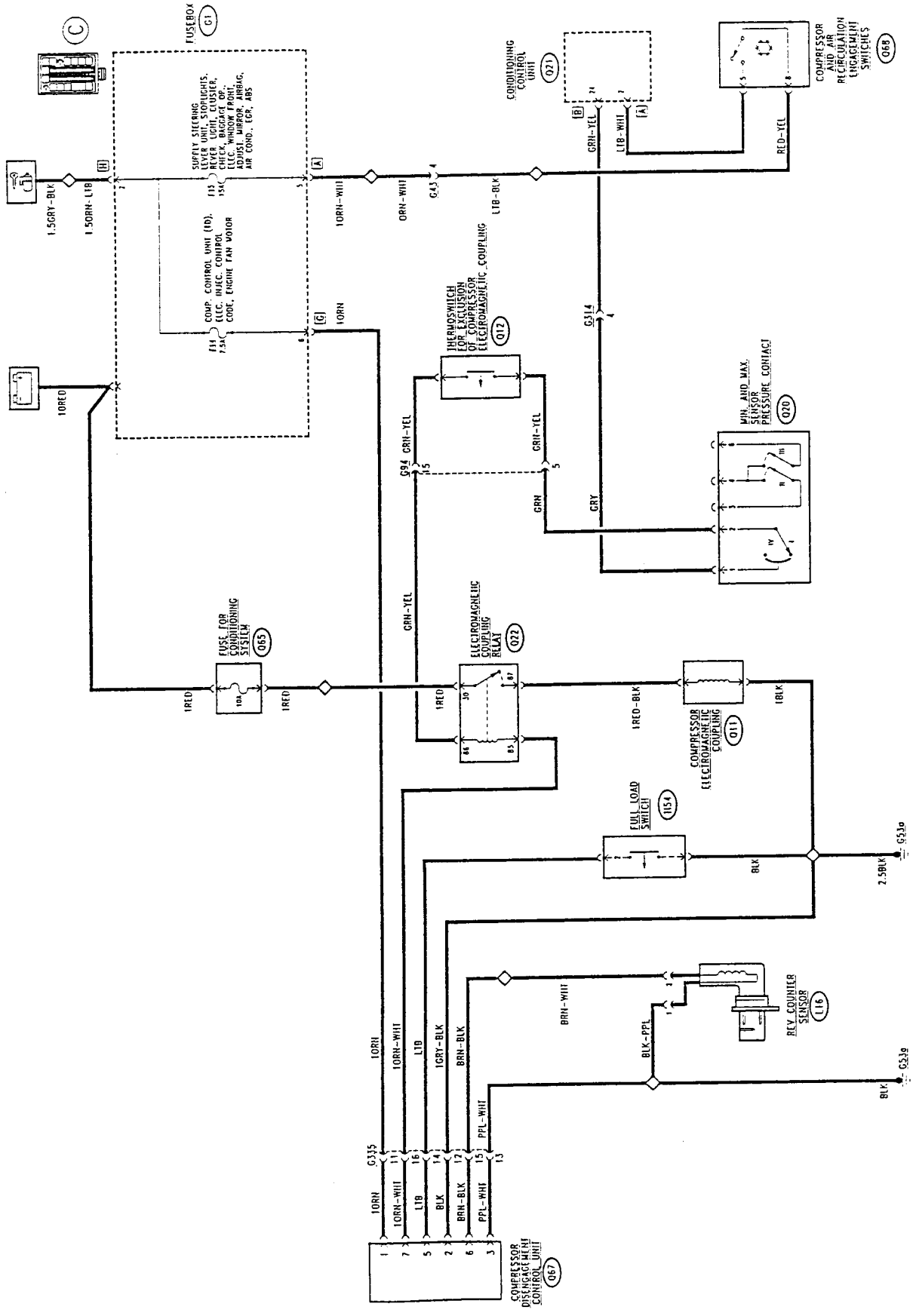

## Functional Description

The electromagnetic joint that operates the compressor **Q11** is actuated by the corresponding relay **Q22**.

Relay **Q22** is supplied directly by the battery, through fuse **Q65**.
The two energising signals (12 V and earth) reach relay **Q22** from the compressor cut out control unit **Q67**, and from the control switch **Q68**:

- the positive signal leading from the switch in **Q68**, before reaching relay **Q22** it crosses the compressor cut out thermal contact **Q12** (which cuts off the compressor if the engine is very hot) and the pressure switch **Q20**.
  The signal also crosses control unit **Q21** which comes into operation in the following conditions:
  - low outside temperature: (disengagement below 4°C and re-engagement above 6°C);
  - low mixed air temperature (disengagement below 3.5°C and re-engagement above 5°C);
- the signal leading from the control unit **Q67** is either 12 V or 0 V (earth), according to the following logic, depending on the rpm (information picked up directly by the rev counter sensor **L16**:
  - up to 2000 rpm: when the full load switch **H54** closes, an earth signal leaves the control unit -pin 7-, and therefore the compressor electromagnetic joint is not energised; conversely, as soon as the switch opens again the signal from pin 7 becomes 12 V, energising the joint;
  - over 2000 rpm: the earth signal is timed and lasts only 8 seconds, then it becomes 12 V, and therefore the joint is energised, thereby engaging the compressor, if still required by the special button **Q68**.

The control unit **Q67** is connected, as mentioned previously, with the rev counter **L16** at pin 3 and 6, at switch **H54** - pin 5; pin 2 is earthed, while pin 1 receives the key-operated supply via relay **I35** and fuse **F4** of box **G1** (box "A" or fuse **F14** (box "C" the compressor engagement signal leaves pin 7 as described above.

When energised, relay **Q22** operates the electromagnetic joint **Q11** which turns on the compressor.

## Components and Connectors

| Fusebox | G1 |
|---|---|

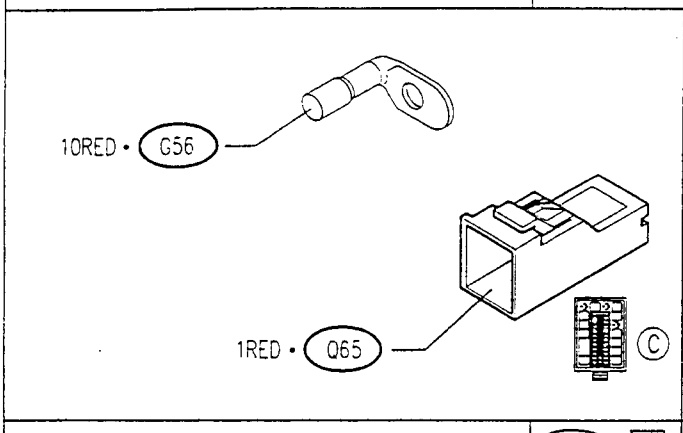


| Fusebox | G1 A |
|---|---|

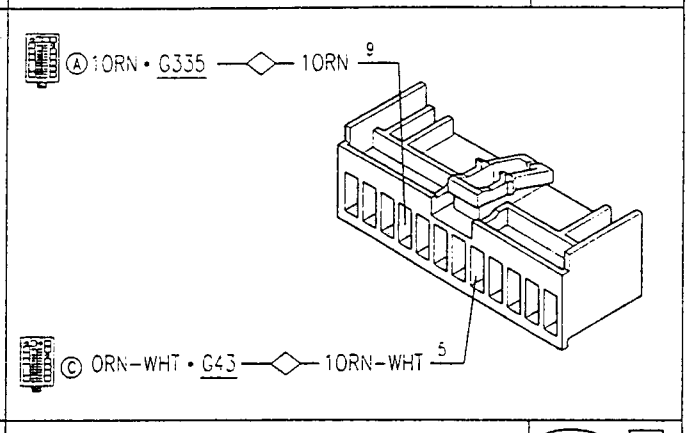


| Fusebox | G1 H |
|---|---|

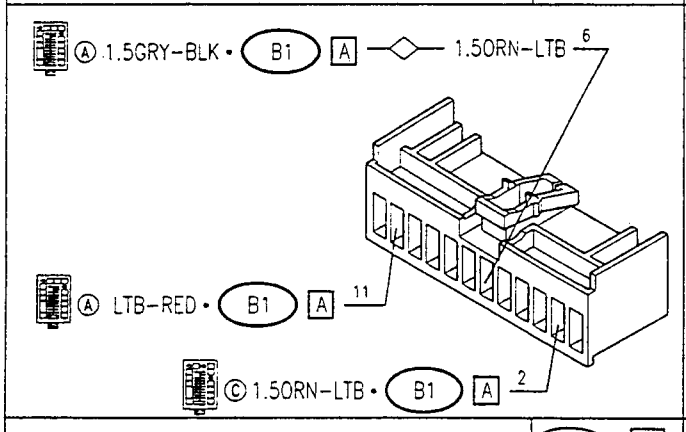


| Fusebox | G1 G |
|---|---|

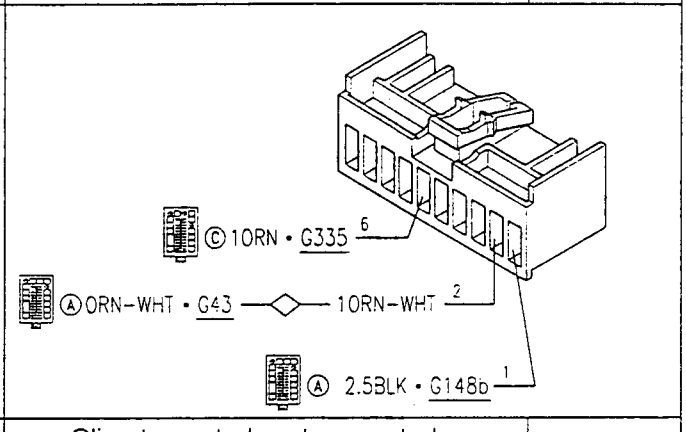


| Fusebox | G1 Q |
|---|---|

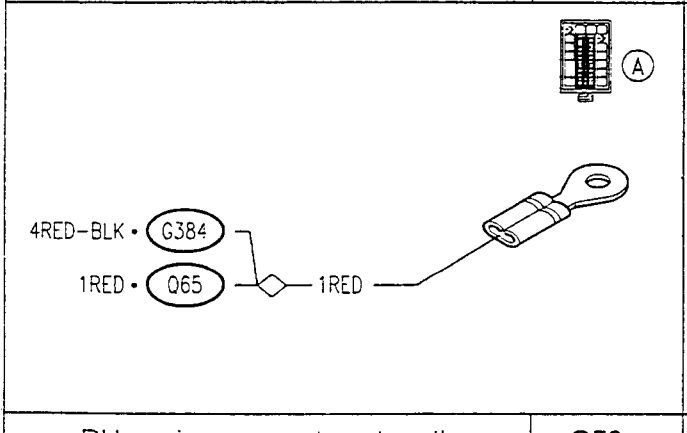


| Climate control system controls wiring connector | G43 |
|---|---|

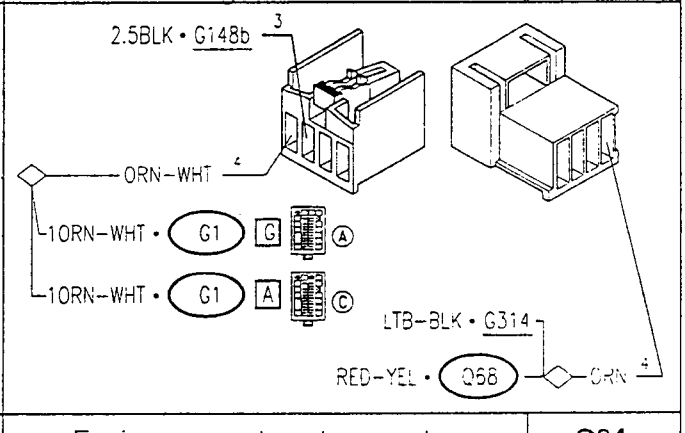


| RH engine compartment earth | G53a |
|---|---|

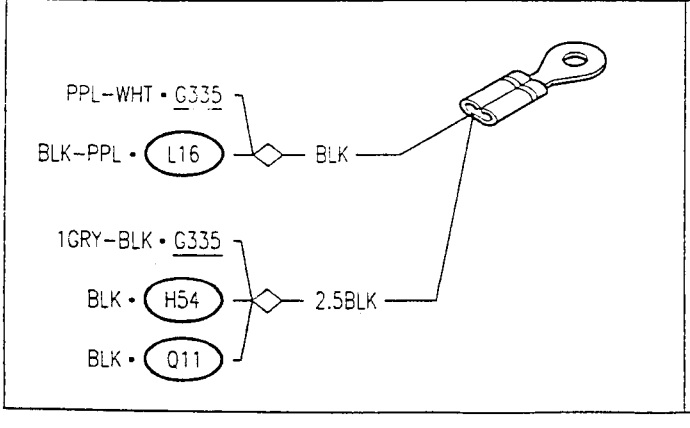


| Engine compartment connector | G94 |
|---|---|

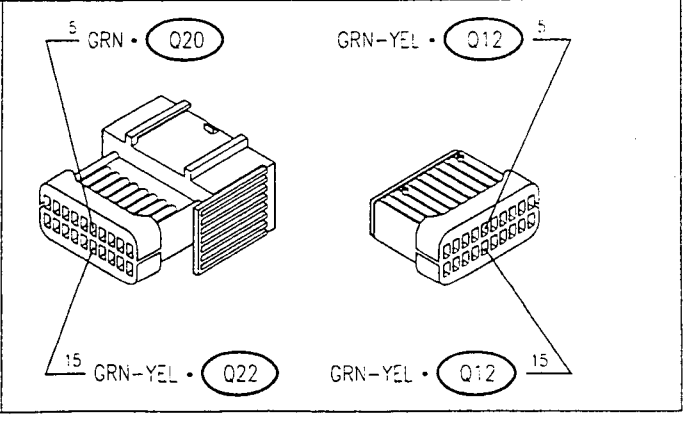

## Components and Connectors (continued)

| Earth under LH dashboard | G148b |
|---|---|

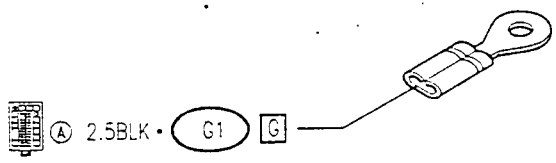


| Engine wiring/conditioner wiring connector | G314 |
|---|---|

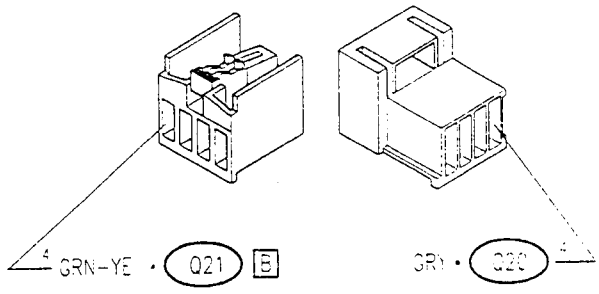


| Connector for E.G.R. | G335 |
|---|---|

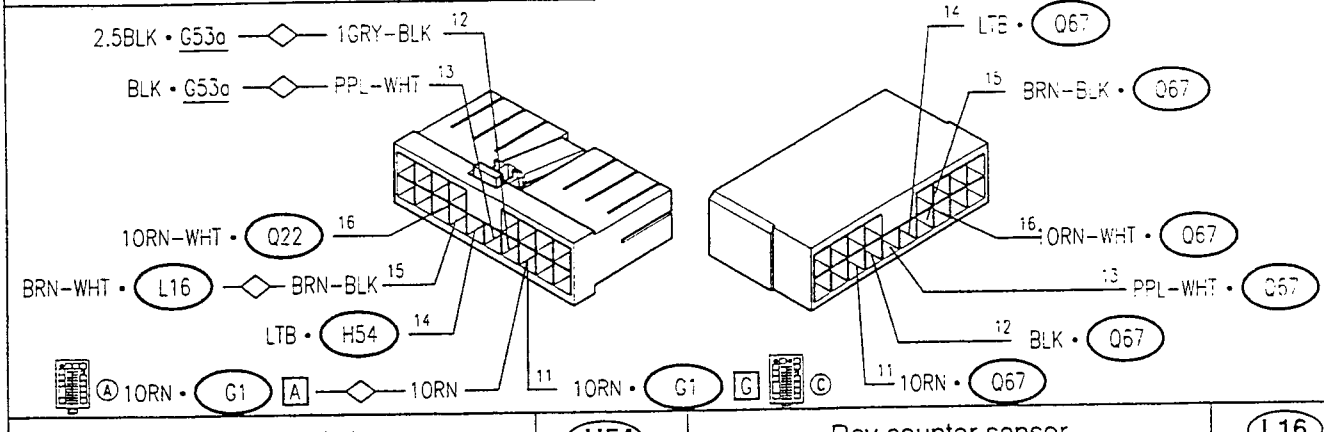


| Full load switch | H54 |
|---|---|

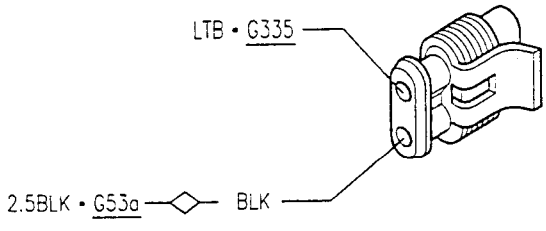


| Rev counter sensor | L16 |
|---|---|

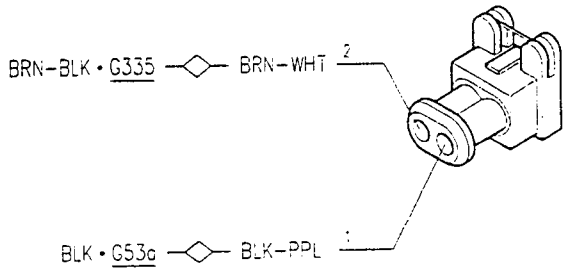


| Compressor electromagnetic joint | Q11 |
|---|---|

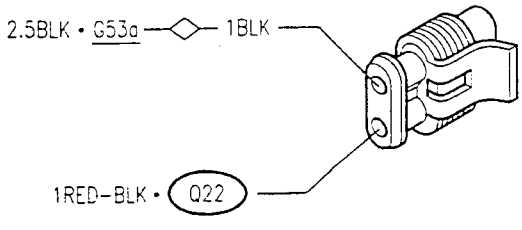


| Compressor electromagnetic joint cut out thermal contact | Q12 |
|---|---|

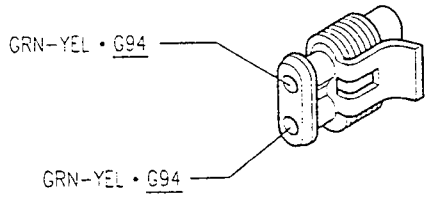

## Components and Connectors (continued)

| Min. and max. sensor pressure contact | Q20 |
|---|---|

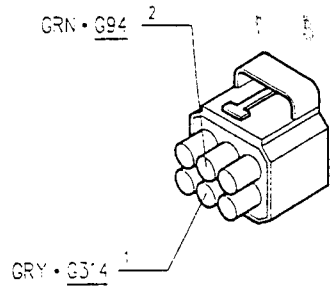


| Climate control unit | Q21 A |
|---|---|

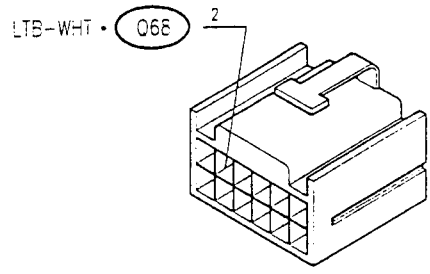


| Climate control unit | Q21 B |
|---|---|

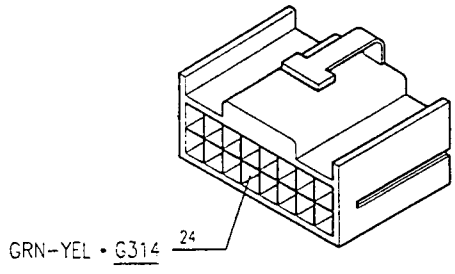


| Electromagnetic joint control relay | Q22 |
|---|---|

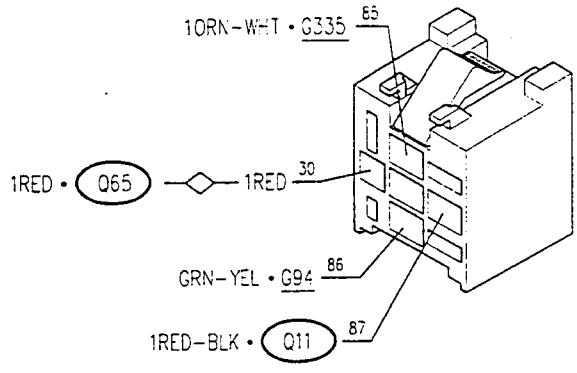


| Conditioning system wander fuse | Q65 |
|---|---|

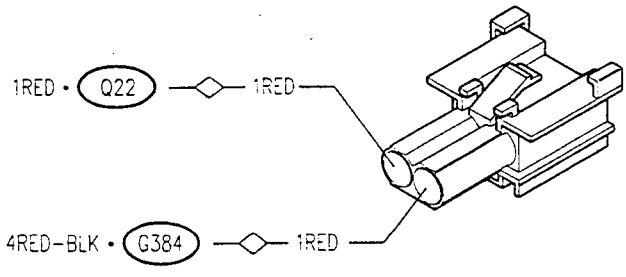


| Compressor disengagement control unit | Q67 |
|---|---|

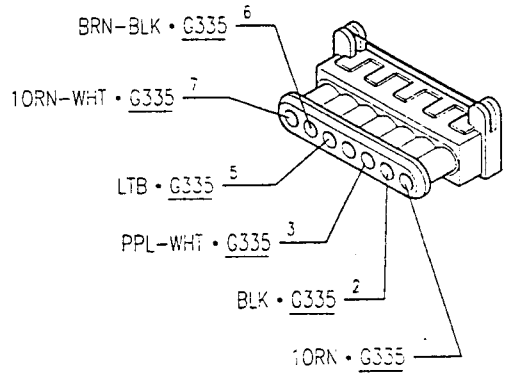


| Compressor and air recirculation switches | Q68 |
|---|---|

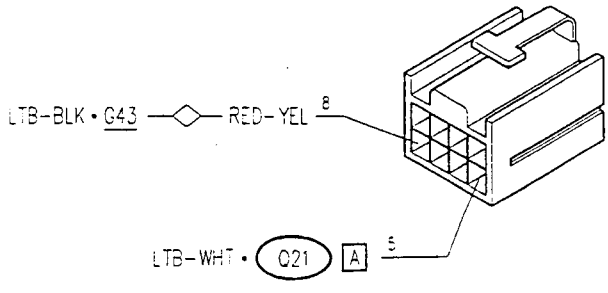

## COMPRESSOR ENGAGEMENT (JTD version)

### Wiring Diagram

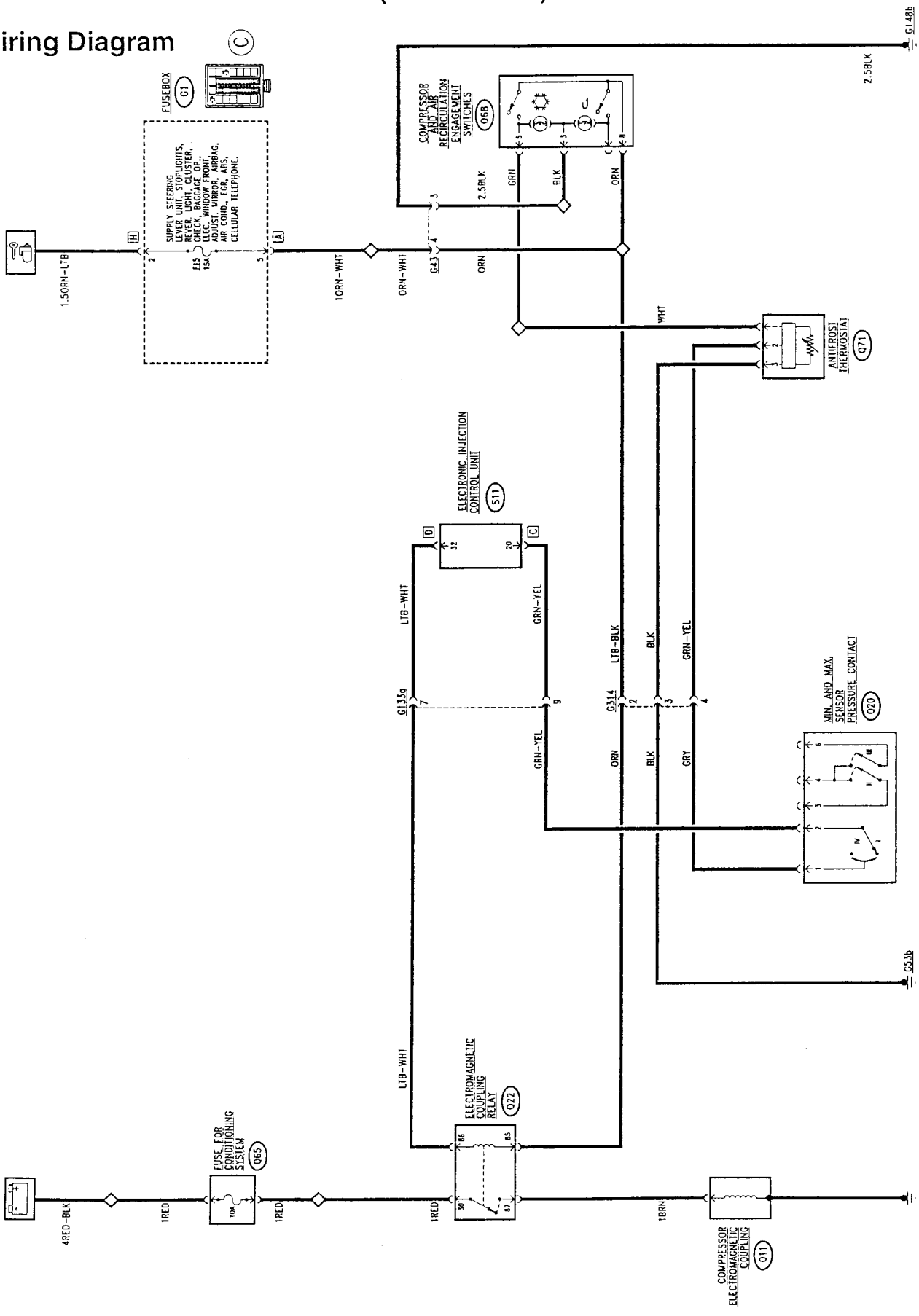

## Functional Description

The electromagnetic joint which operates the compressor **Q11** is controlled by relay **Q22** located next to terminal strip **G56** which contains the MAXI FUSES.

The coil of relay **Q22** receives the key-operated supply (line protected by fuse **F15** of fusebox **G1**; while the power line is supplied by battery voltage through wander fuse **Q65**.

Relay **Q22** is energised and consequently supplies 12 V to the electromagnetic joint **Q11**, according to the following logic, controlled by the injection electronic control unit which is connected with the air conditioning system through:

- pin 20 of connector C, which receives the signal requesting engagement of the system from the air conditioning system circuit;
- pin 32 of connector D, from which a ©low² (earth) signal leads that controls relay Q22 for engaging the air conditioner compressor Q11.

A special logic enables this engagement, as follows:

- it adapts idle speed to compensate the increase in absorbed power due to compressor engagement;
- if the engine needs high power (high throttle opening speed), full load, or high engine temperature, it momentaneously cuts off compressor engagement.

The positive signal leading from the compressor engagement switch **Q68** crosses the control unit **Q21** which comes into action in the following conditions:

- low outside temperature: (disengagement below 4°C and re-engagement above 6°C);
- low mixed air temperature (disengagement below 3.5°C and re-engagement above 5°C).

The same signal also crosses the pressure switch **Q20** which cuts in if the pressure of the cooling system is too high or too low: in this case the signal does not reach the control unit which does not command compressor engagement.

## Components and Connectors

| Fusebox | G1 A | Fusebox | G1 H |
|---|---|---|---|

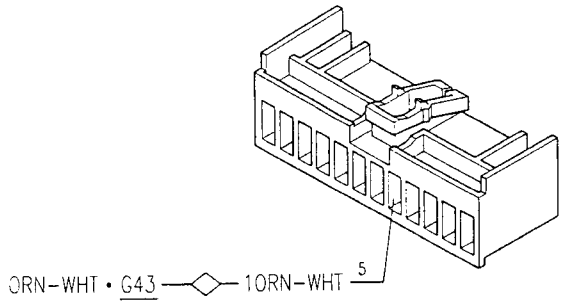


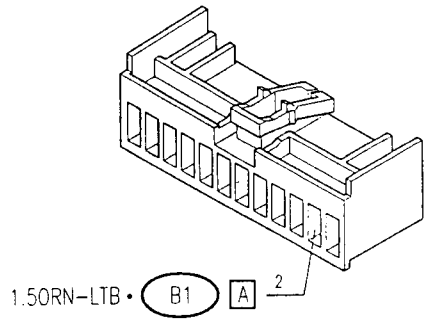


| Climate control system controls wiring connector | G43 | Connector for electronic injection wiring A | G133a |
|---|---|---|---|

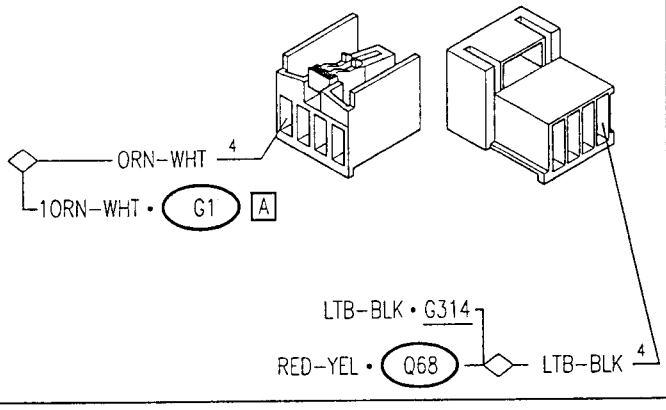


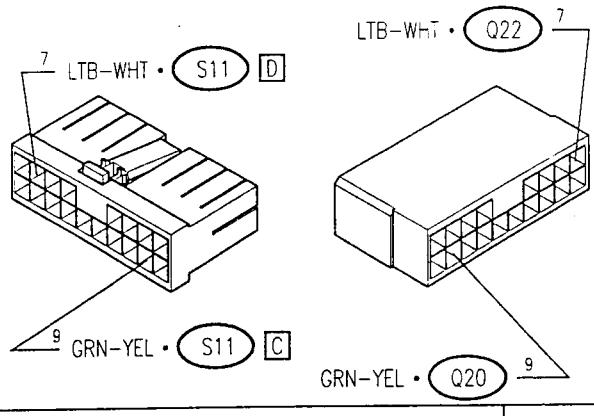


| Connector for engine wiring/conditioner wiring | G314 |
|---|---|

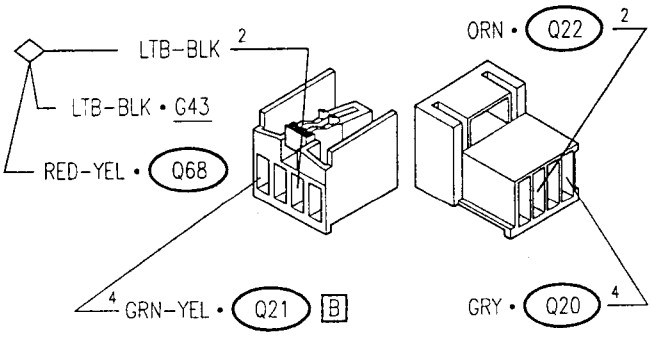


| Compressor electromagnetic coupling | Q11 | Min. and max. sensor pressure contact | Q20 |
|---|---|---|---|

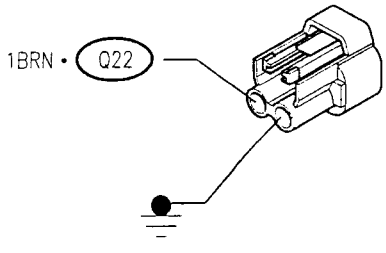


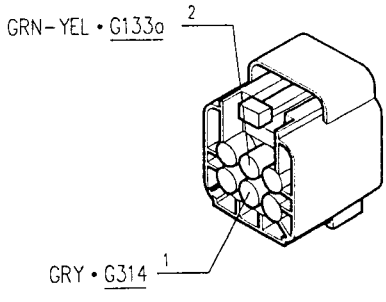

## Components and Connectors (continued)

| Climate control system control unit | Q21 A |
|---|---|

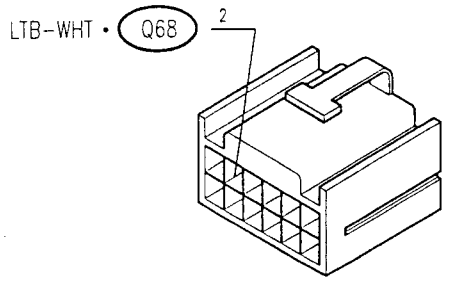


| Climate control system control unit | Q21 B |
|---|---|

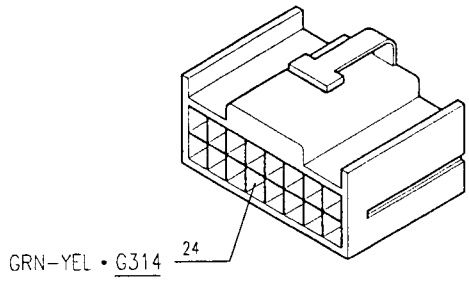


| Electromagnetic coupling relay | Q22 |
|---|---|

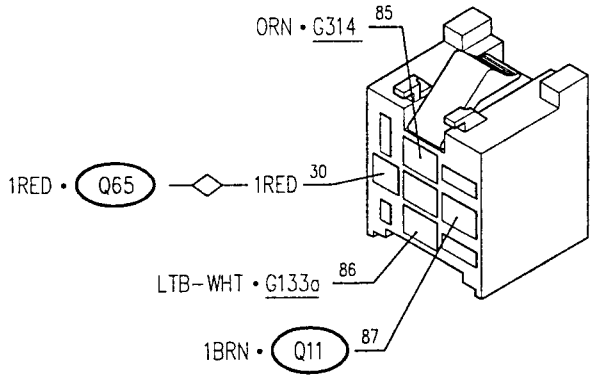


| Fuse for conditioning system-7.5 A | Q65 |
|---|---|

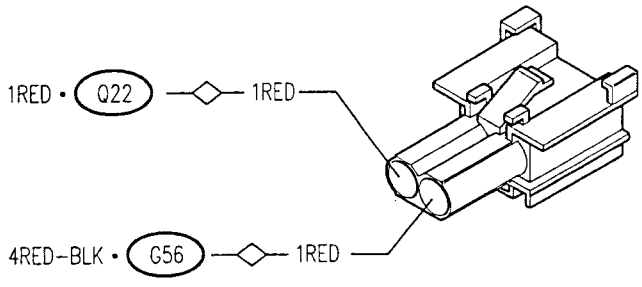


| Compressor and air recirculation engagement switches | Q68 |
|---|---|

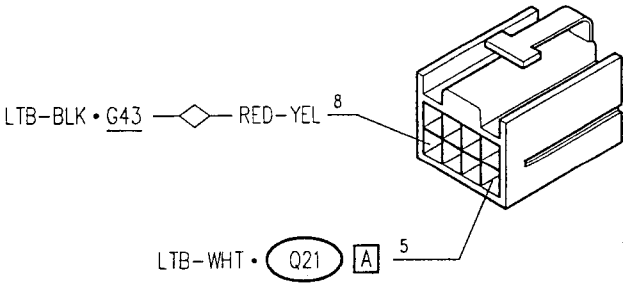


| Electronic injection control unit | S11 C |
|---|---|

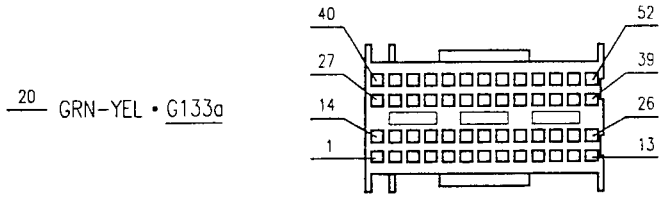


| Electronic injection control unit | S11 D |
|---|---|

## LOCATION OF COMPONENTS (petrol versions)

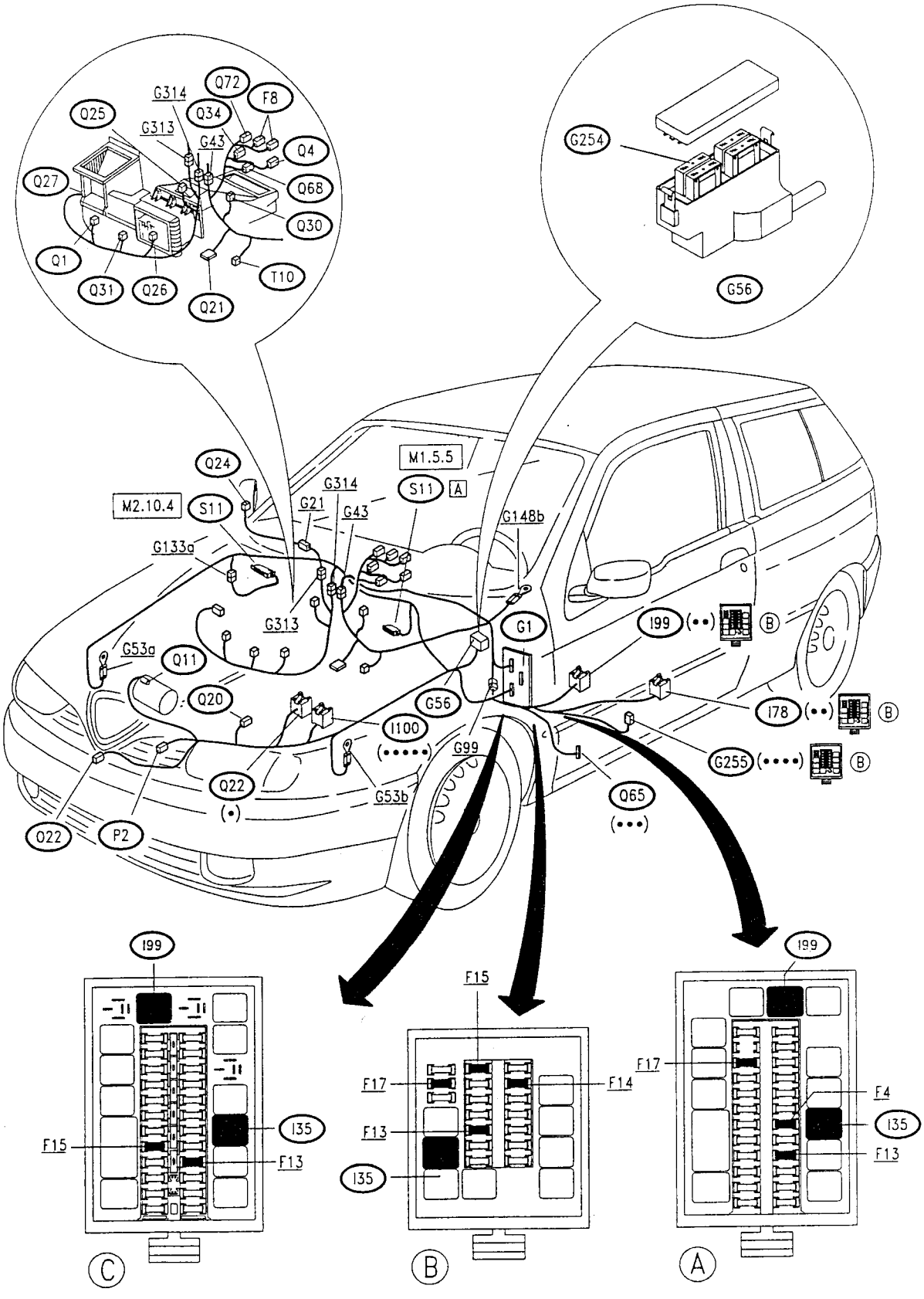


(•) grey base
(••) yellow base
(•••) red fuseholder
(••••) green fuseholder
(•••••) black base

## LOCATION OF COMPONENTS (TD versions)

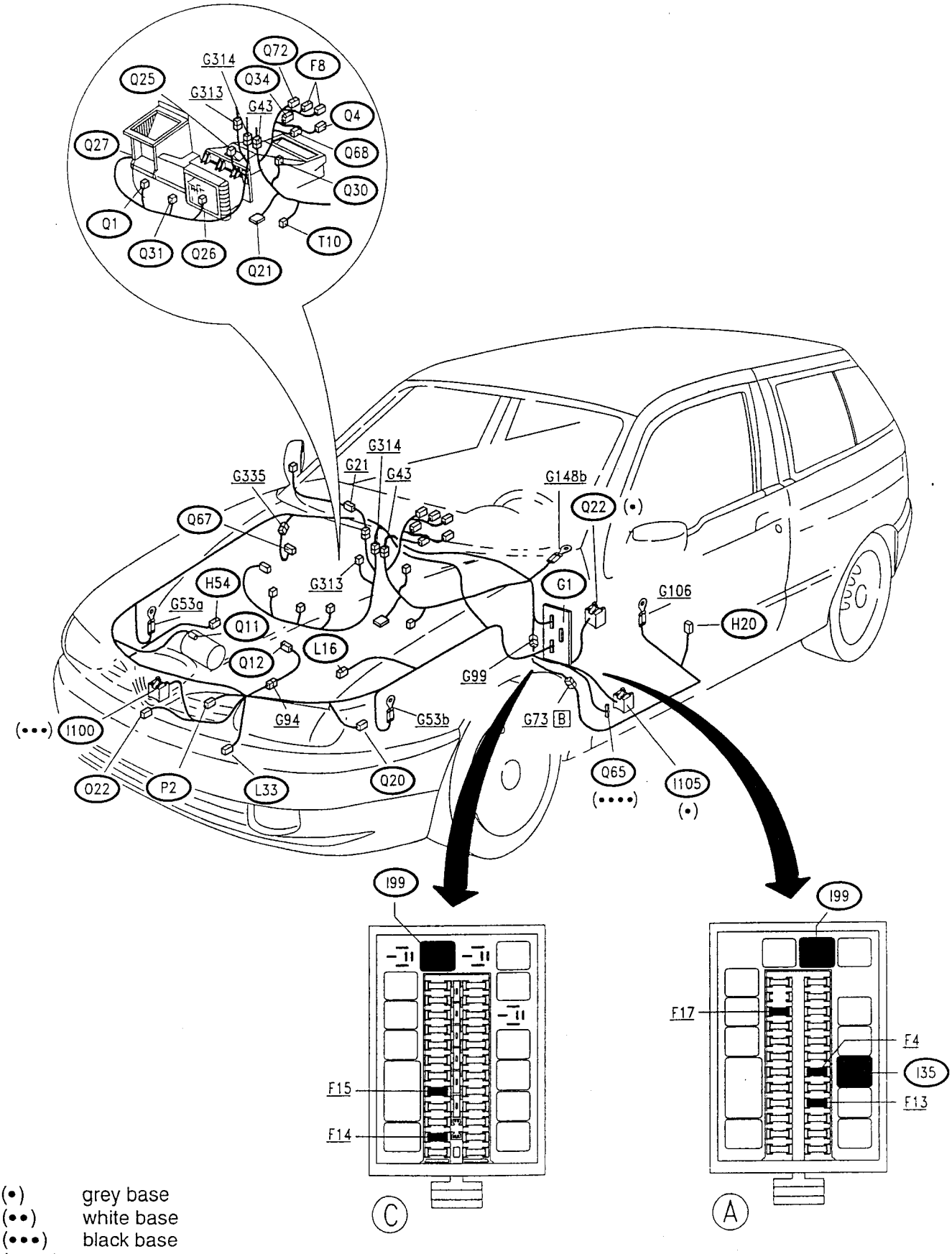


(•) grey base
(••) white base
(•••) black base
(••••) red fuseholder

## LOCATION OF COMPONENTS (JTD versions)

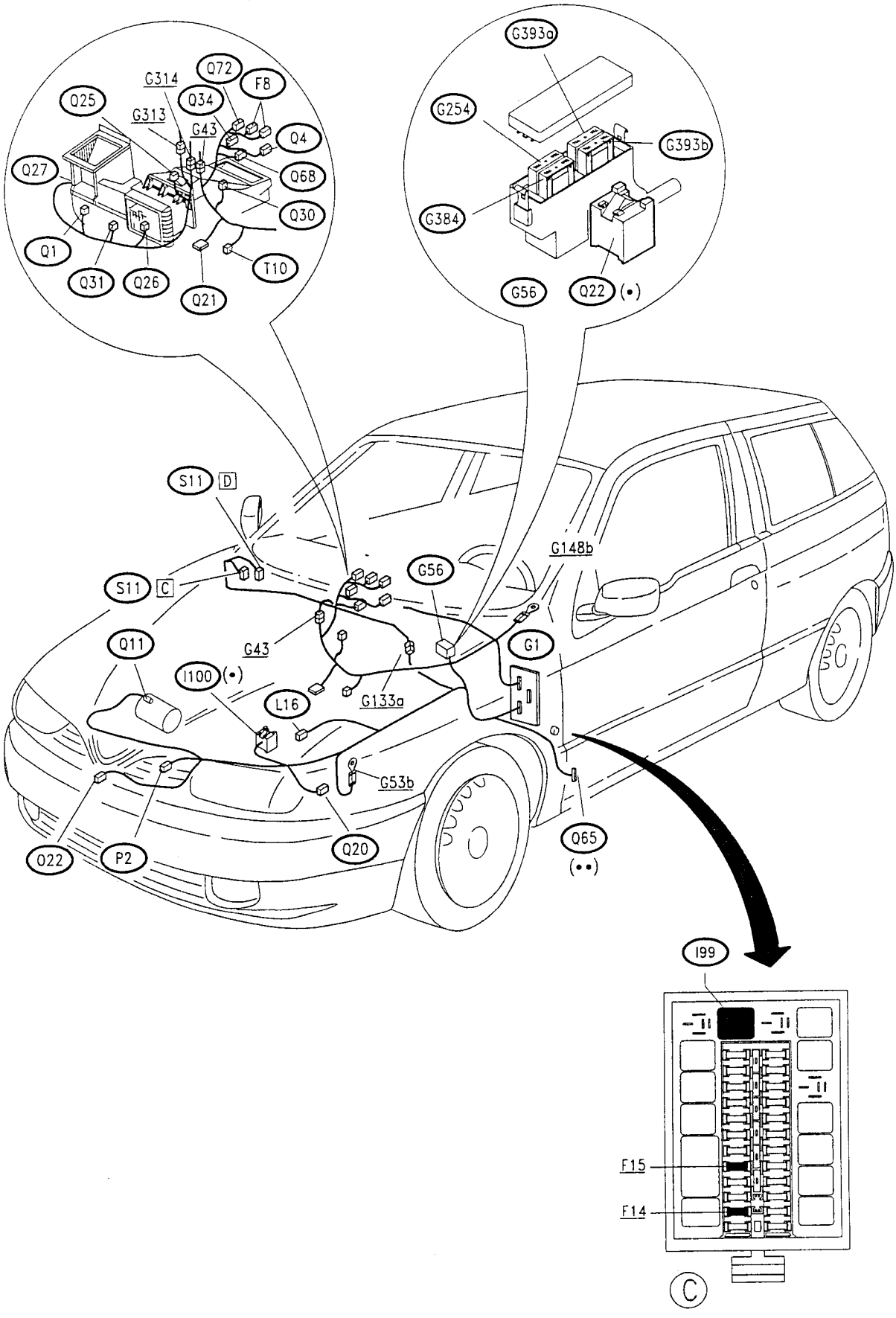


(•) black base
(••) red fuseholder

## Self-diagnosis

Through suitable control logics of the sensors and adjustment with "self-learning" of the actuators, the electronic control unit is capable of recording and storing a series of faults and failures which may occur in the system.

In the event of such faults the control unit still continues to manage the system replacing any abnormal values with suitable "**recovery**" values which ensure minimal operation, even if not perfect, of the system.

The errors stored can be read by the ALFA ROMEO TESTER, and there are two types:

- **"occasional" errors**, which are reset with the ignition key at STOP
- **"permanent" errors**: if an error occurs more than 5 times in a determinate time it is considered as permanent and memorised in the control unit; these errors are NOT reset with the key at STOP, but only after a specific outside command (Tester).

A preliminary system check is possible through **TEST A**.

# FAULT-FINDING TABLE

**NOTE:**
The fault-finding table for the air conditioner has been subdivided into three sections to simplify interpretation, which contain the three functions shown separately also in the wiring diagrams:

- Climate control fan, air temperature and recirculation control (see SELF-DIAGNOSIS)
- Compressor control
- Engine fan control (see Sect. 32A) (B)

## Compressor control

| Fault | | Component to be checked | | | | | | | | | | | | |
|---|---|---|---|---|---|---|---|---|---|---|---|---|---|---|
| | | Q65 | F17 | F4 | F15 (C) | Q11 | Q20 | Q21 | Q12 | H54 | Q67 | Q22 | Q68 | S11 |
| Compressor engagement (in all circumstances) | petrol | • | • | | • | • | | | | | | • | • | |
| | TD | • | • | • | | • | | | | | | • | • | |
| | JTD | | | | • | • | | | | | | • | • | |
| Compressor engagement (only in certain circumstances) (*) | petrol | | | | | | • | • | | | | | | • |
| | TD | | | | | | • | • | • | • | • | | | |
| | JTD | | | | | | • | • | | | | | | • |

(C) Only for fusebox "C"
(*) Operation of the compressor is cut off by the system logic in the following conditions:

- coolant fluid pressure > 28 bar appr.;
- coolant fluid pressure < 2.5 bar appr. (circuit discharged);
- outside temperature < 5°C;
- mixed air temperature < 3.5 °C;
- engine temperature > 111°C (only TD);
- full load (temporary cut off for appr. 8 sec. with engine speed over 2000 rpm.) (only TD).

Moreover, this operation is also determined by the logic of the ignition/injection control unit (only petrol) (see corresponding section).

| PRELIMINARY CHECKS ON THE AUTOMATIC AIR CONDITIONING SYSTEM | TEST A |
|---|---|

| TEST PROCEDURE | RESULT | CORRECTIVE ACTION |
|---|---|---|
| **A1** CHECK FUSE<br>– Check the intactness of fuses **F13** and **F17** of fusebox **G1**, and wander fuses **Q65** and **G255** (only for fusebox B) | OK ▶<br>~~OK~~ ▶ | Carry out **step A2**<br>Replace any faulty fuse/s |
| **A2** CHECK RELAY<br>– Check the intactness of relay **I78** (only for fusebox B) | OK ▶<br>~~OK~~ ▶ | Carry out **step A3**<br>Replace the faulty relay |
| **A3** CHECK CONTINUITY<br>– Check continuity of the cable between the control unit **Q21** (pin 25) and connector G, fusebox **G1** | OK ▶<br>~~OK~~ ▶ | Carry out **step A4**<br>Restore the continuity of the wiring |
| **A4** CHECK CONTINUITY<br>– Check continuity of the cable between the control unit **Q21** (pin 3 and 13) and earth **G148b** | OK ▶<br>~~OK~~ ▶ | CONNECT TO THE DIAGNOSIS SOCKET **T10** AND CONTINUE OPERATIONS WITH THE ALFA TESTER<br>Restore continuity of the wiring |

## CHECK COMPONENTS

N.B.:
Here, only the specific components for the AUTOMATIC CONDITIONER are mentioned: those shared with the MANUAL CONDITIONER are to be found in Section 32A.

### Outside air temperature sensor (Q24)

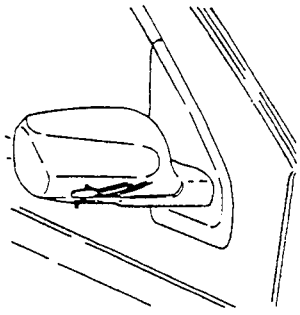

| SPECIFICATIONS | |
|---|---|
| Resistance at 25°C (with operating range from -30°C to +50°C) | 10 kOhm |

### Antifrost sensor (Q26)

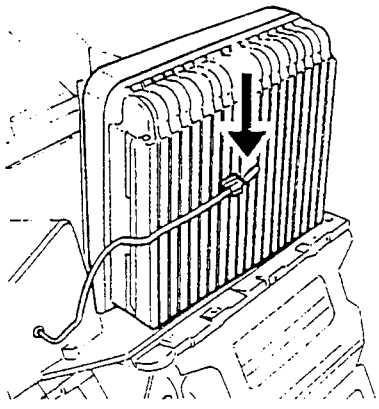

| SPECIFICATIONS | |
|---|---|
| Resistance at 25°C (with operating range from -5°C to +25°C) | 10 kOhm |

### Treated air temperature sensor (Q25)

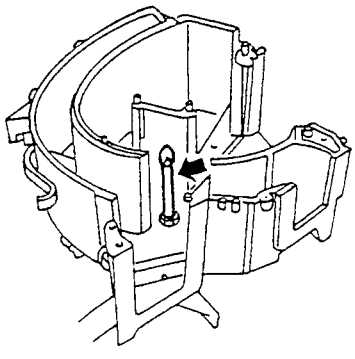

| SPECIFICATIONS | |
|---|---|
| Resistance at 25°C (with operating range from 0°C to +80°C) | 10 kOhm |

## Climate control system fan control (Q4)

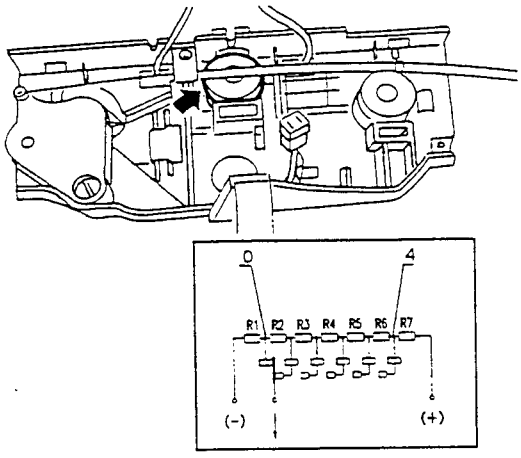


| SPECIFICATIONS | |
|---|---|
| Resistences R1 ÷ R7 | 1500 Ohm ± 1% |

## Required temperature regulator control (Q34)

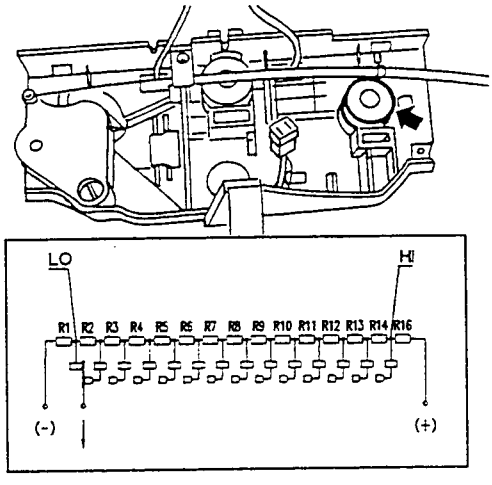


| SPECIFICATIONS | |
|---|---|
| Resistances R1 ÷ R16 | 681 Ohm ± 1% |

## Passenger compartment temperature sensor (Q33)

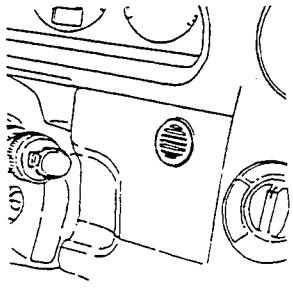

| SPECIFICATIONS | |
|---|---|
| Resistance at 25°C (with operating range from +5°C to +45°C) | 2.2 kOhm |

## Mixing control actuator (Q30)

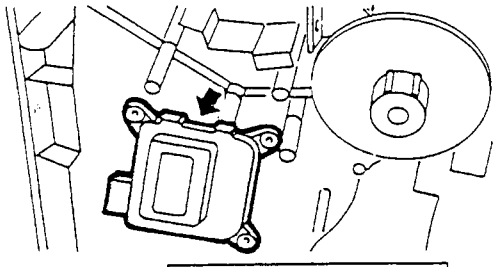

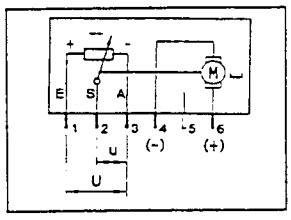


| SPECIFICATIONS | |
|---|---|
| Total angle of rotation between max. heat and max. cool | 62° |
| Ratio u/U for max. heat | 0.707 |
| Ratio u/U for max. cool | 0.26 |

## Mixing control actuator (Q31)

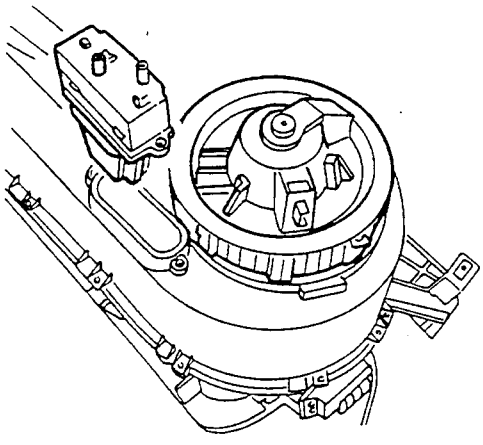

| SPECIFICATIONS |
|---|
| **Wiring diagram** |

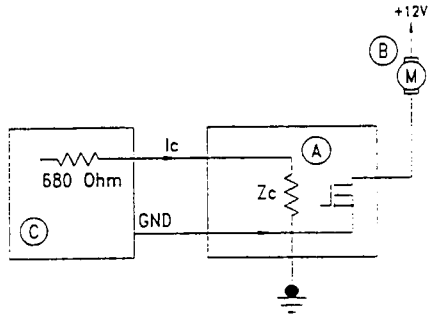


Delivery current Ic = 1 mA max.
Max. current I = 5A
Adjustment impedance Zc = 80 kOhm

A = fan
B = electric regulator
C = electronic control unit