SUSPENSION AND WHEELS

INDEX

FORNT SUSPENSION 1351 1596 1712 16V

- Description 1
- Helical spring and shock absorber assembly 2
- Wishbones 3
- Engine support frame and stabilizer bar 5

FRONT SUSPENSION 1929 TD 1970 T. SPARK 16V

- Description 7
- Helical spring and shock absorber assembly 8
- Wishbone 9
- Front crossmember and antiroll bar 9

FRONT SUSPENSION 1370 1598 1747 T. SPARK 16V

- Description . . . . . (*)
- Helical spring and shock absorber assembly . . . . . (*)
- Wishbone . . . . . (*)
- Front crossmember and antiroll bar . . . . . (*)

REAR SUSPENSION

- Description 11
- Shock absorbers 11
- Helical springs 12
- Stabilizer bar 13
- Longitudinal arm 13
- Rigid rear axle 15

HUBS AND WHEELS

- Front wheel upright (Boxer versions) 17
- Front wheel upright (Turbodiesel and T. Spark 16V versions) 20
- Rear wheel hub 22
- Wheels 23

ALIGNMENT

- Checking front wheel alignment 24
- Checking rear wheel alignment 24
- Checking characteristic angles 25

(*): See 1970 T. SPARK 16V

DESCRIPTION

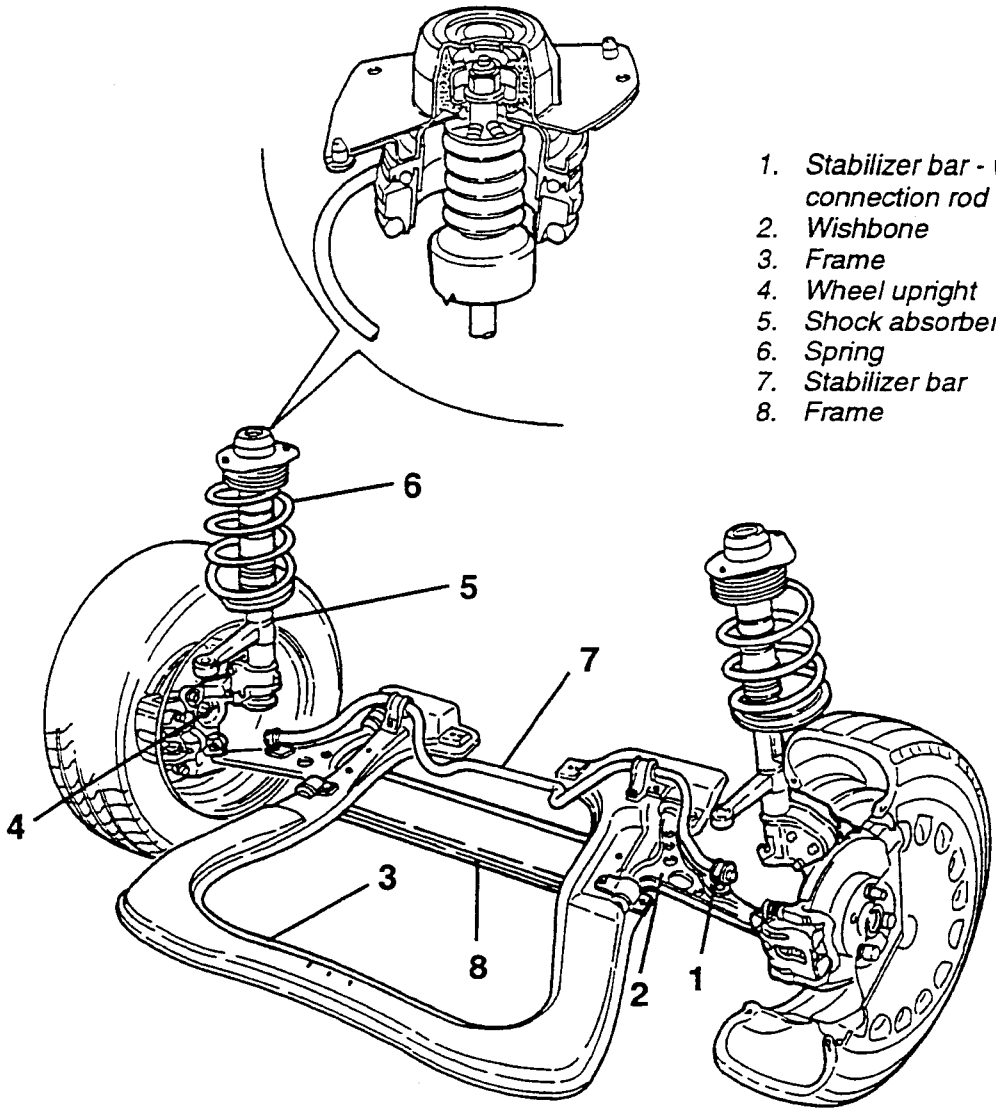

The front suspension to independent wheels is of the McPherson type with telescopic struts and negative kingpin offset.
The front suspension assembly can be broken down into the following main components:
- The frame (3) supporting the power unit which is rigidly fastened to the body which besides integrating the bearing structure, also supports the cast iron suspension wishbones (2).
- The telescopic struts which comprise the helical springs (6) and the shock absorbers (5).
The offset and tapered springs make it possible to reduce the thrust on the shock absorber stem and facilitate steering.
This solution also eliminates shock absorber noise when the car is on the move, consequently improving comfort.
The newly-designed shock-absorbers are pressurised with lamellar inlet valves with plates with particularly fine tolerances, thereby achieving outstanding results in terms of comfort and noiselessness over large obstacles while maintaining the necessary damping action.
- The cast iron wishbones (2), carry the ball joints connected with the wheel upright (4) and the silent-blocks with steel sheet reinforcement for fastening the wishbones themselves to the frame (3).
The rotation of the wishbones on the silent-block confers high transversal rigidity and low longitudinal rigidity to the suspension.
These operating conditions make it possible to:
- improve vehicle behaviour even under particularly critical roadholding conditions.
- improve driving comfort.
Increasing the rigidity of the suspension on one side of the vehicle and lowering it on the other, the stabilizer bar (7) serves to limit transversal inclination of the car body.
This makes it possible to increase the speed limits when cornering as it counters the increase in the roll of the body caused by the centrifugal stresses which occur as the speed increases.

HELICAL SPRING AND SHOCK ABSORBER ASSEMBLY

REMOVAL/REFITTING

- Remove the front wheel on the side concerned.
1. Disconnect the cable of the A.B.S. inductive sensor from the fastening on the shock absorber.
2. Disconnect the cable of the brake pad wear sensor and the brake hose from the connection on the shock-absorber.

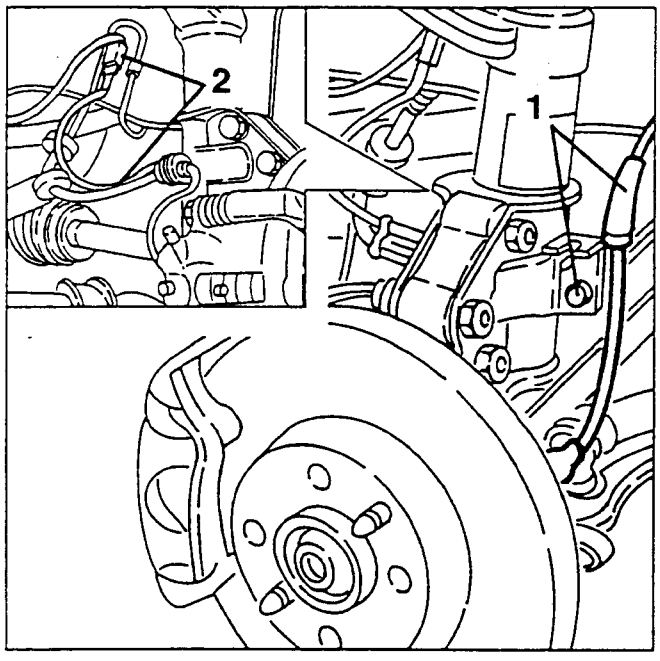

1. Unscrew the nut fastening the track rod from the connection on the shock absorber.
2. Using tool N° 1.821.169.000 (A.3.0633), disconnect the track rod from the connection on the shock absorber.
3. Slacken the three bolts fastening the shock absorber to the wheel upright.

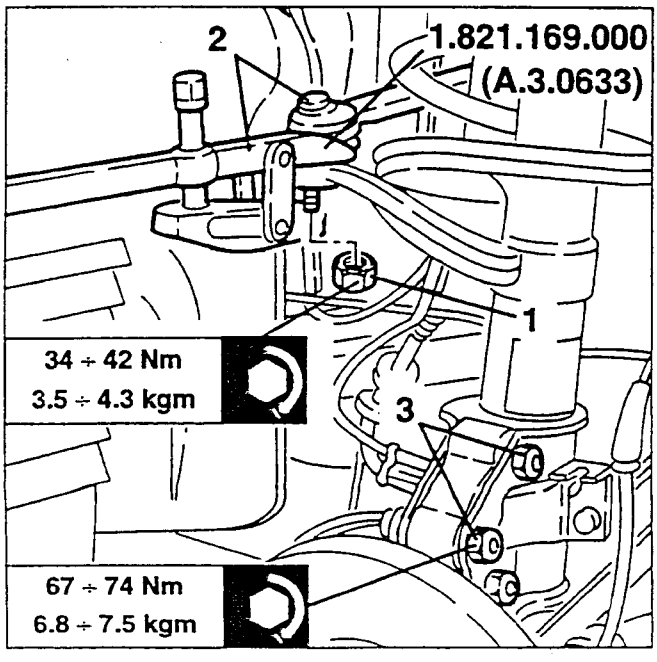

- Lower the car.
1. If needing to separate the spring from the shock absorber on the bench, remove the protective cover and using the shock absorber stem retainer tool N° 1.820.247.000 and the extension for wrench N° 1.822.134.000, slacken the centre spring retainer nut.

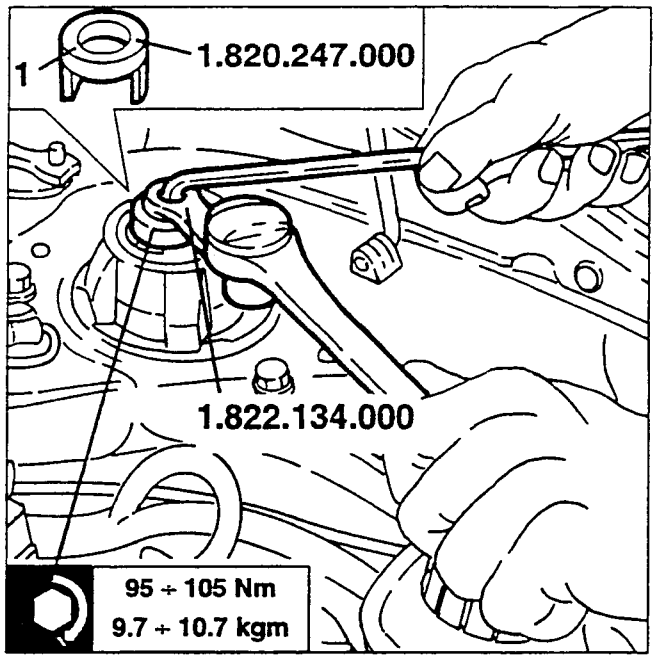

1. Slacken the three screws fastening the shock absorber to the body.
2. Remove the spring-shock absorber assembly from the wheel house.

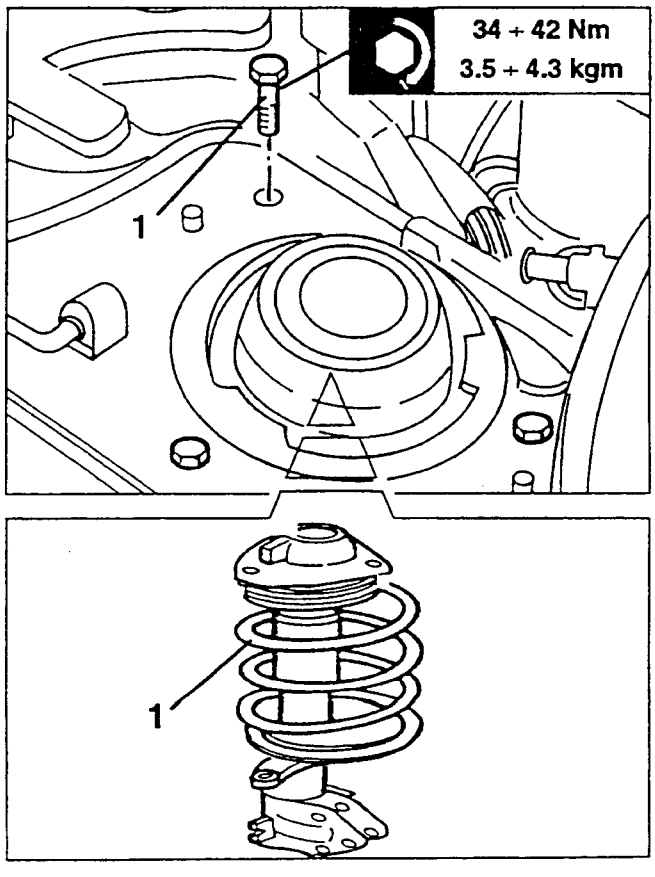

For tightening the spring retainer nut, use wrench N° 1.822.134.000 coupled to a torque wrench, the correct tightening torque must therefore be calculated by applying the following formula:

$$Cr = \frac{La \cdot Cn}{La + Lb}$$

La : length of torque wrench (in m)
Lb : length of wrench N° 1.822.134.000 (in m)
Cn : nominal torque (95 ÷ 105 Nm)

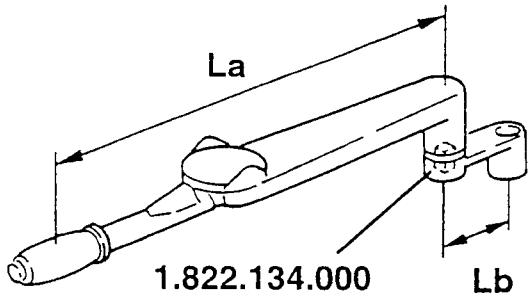

DIS-ASSEMBLY/RE-ASSEMBLY

1. Position the spring-shock absorber assembly on tool N° 1.820.089.000 fitted with rest plates N° 1.820.238.000 and blocks N° 1.820.608.000 and compress it.

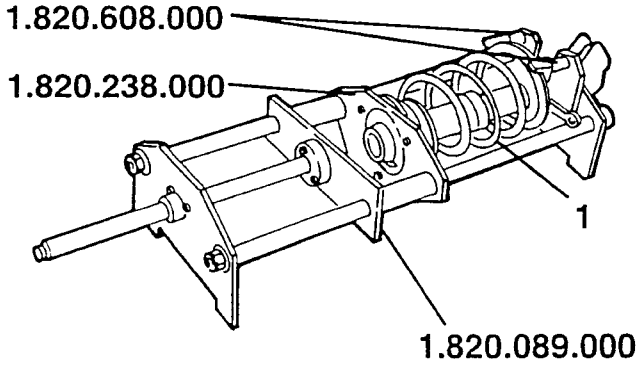

1. Using wrench N° 1.822.134.000 unscrew the retainer nut loosened previously.

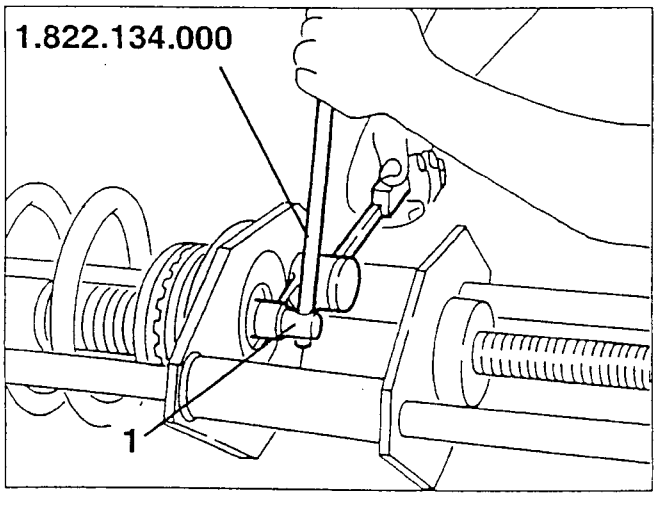

- Decompress the spring-shock absorber assembly and disassemble them.

CHECKS AND INSPECTIONS

- Check that the fastener components of the helical spring - shock absorber assembly show no signs of abnormality that might adversely affect operation.
- Check the conditions of the shock absorber and ensure that they work correctly and are not leaking, in any case change the whole shock absorber.
- Visually check the springs for cracks, distorsions and failures in general that might adversely affect operation.

The helical springs are subdivided into classes of stiffness and marked with coloured paint to simplify identification.If one or both of the springs is replaced, check that the new springs are marked with the same colour as those being replaced.

- Check that the rubber parts are intact and change them if they are damaged, deformed or obviously worn.

WISHBONES

REMOVAL/REFITTING

- Set the car on a lift.
- Disconnect the battery (-) terminal.
- Remove the front wheel on the side concerned.
- Raise the car.

1. Slacken the fastening screw and remove the inductive A.B.S. sensor from the wheel upright.

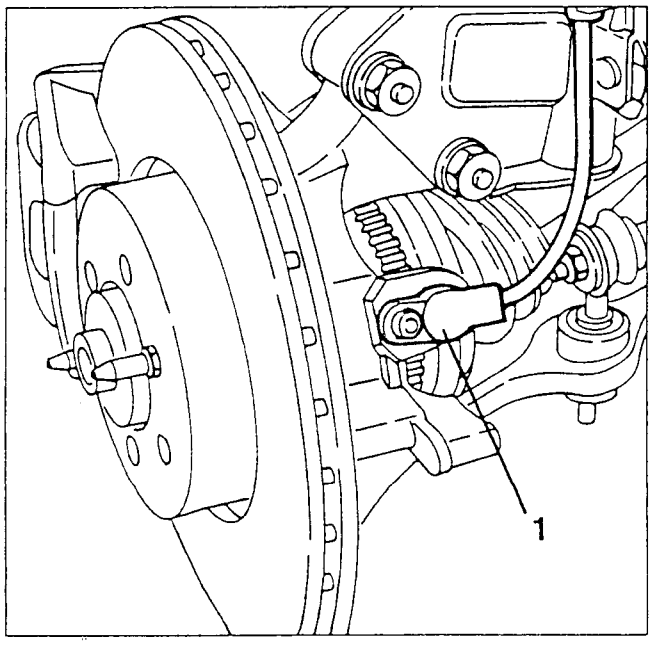

1. Unscrew the nut coupling the stabilizer bar connecting rods from the right and left wishbones.
2. Retrieve the washer and pad.

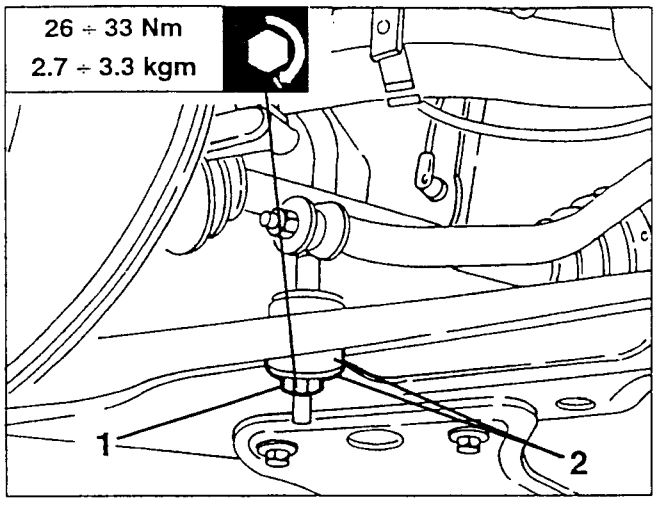

1. Slacken the three bolts fastening the wheel upright to the shock absorber stem.
2. Slacken the bolt fastening the wishbone to the wheel upright.

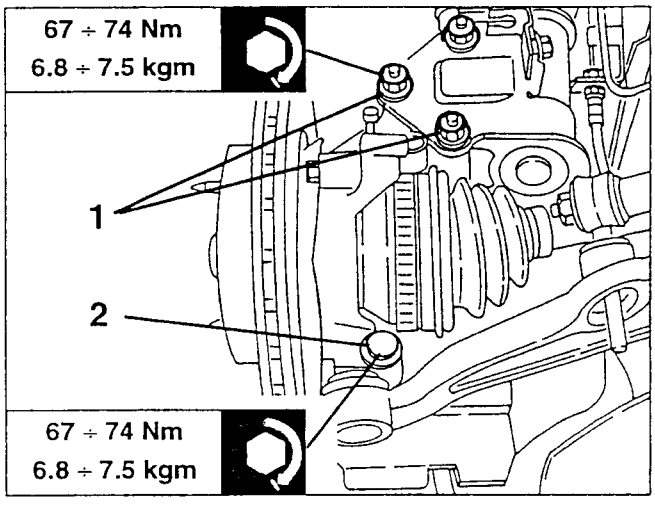

1. Slacken the four screws fastening the wishbone to the engine support frame.

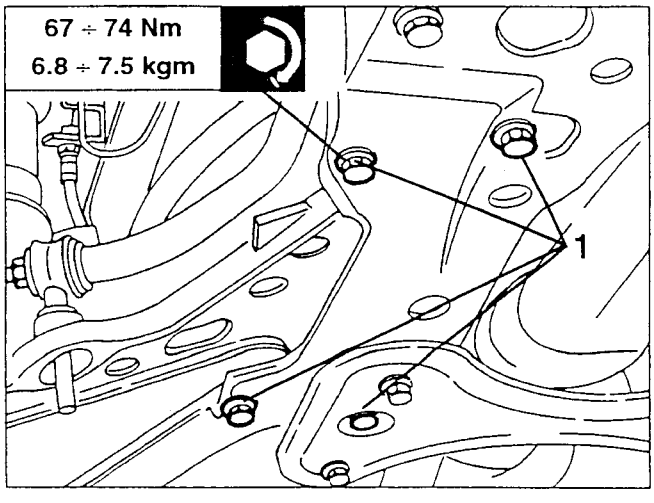

1. Support the suspension with a hydraulic jack as illustrated and remove the wishbone.

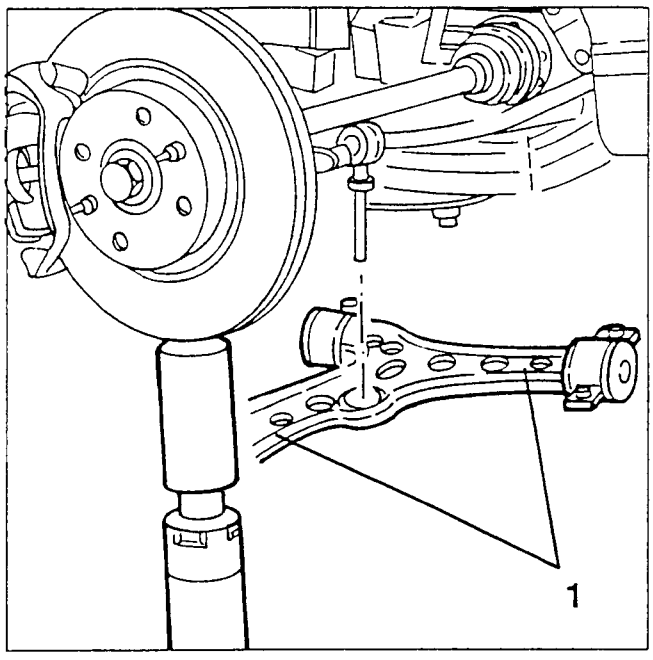

CHECKS AND INSPECTIONS

1. Check the wear conditions of the ball pin connection between the wishbone and the wheel upright and that it is intact, change it if necessary.
2. Check the wear conditions of the U-bolts between the wishbone and front frame and that they are intact, change them if necessary.
3. Check the conditions of wear of the rubber bushes of the U-bolts between the wishbone and the front frame and that they are intact, change them if necessary.
4. Check the conditions of wear of the rubber boots of the ball pin between the wishbone and the wheel upright and that they are intact, change them if necessary.

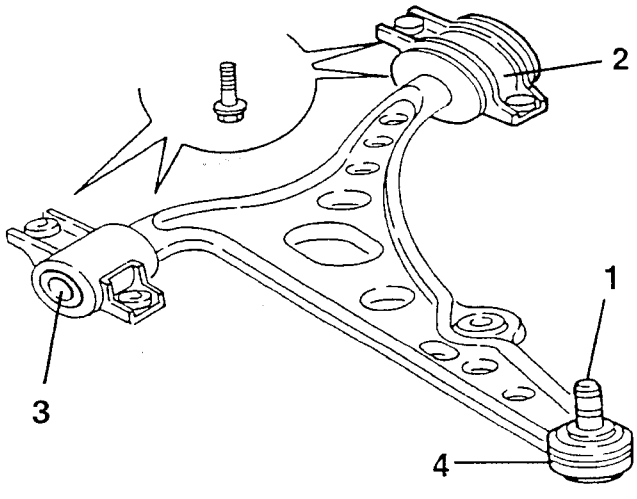

ENGINE SUPPORT FRAME AND STABILIZER BAR

REMOVAL/REFITTING

- Set the car on a lift.
- Remove the front wheels.
- Remove the radiator grille and bumper (see GROUP 70).

1. Using tools N° 1.820.239.000, N° 1.820.581.000 and N° 1.820.226.000 suitably support the engine.

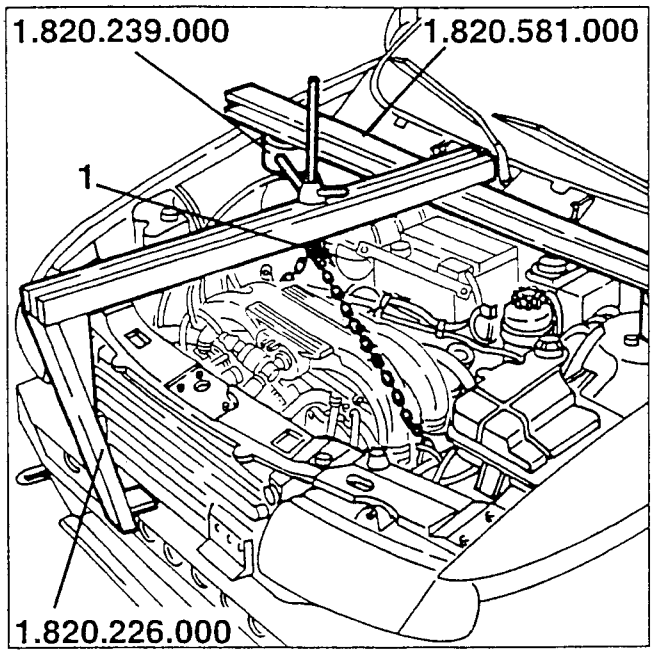

1. Slacken the four fastening screws and remove the engine support frame crossmember.
2. Slacken e remove the lambda sensor from the exhaust manifolds.

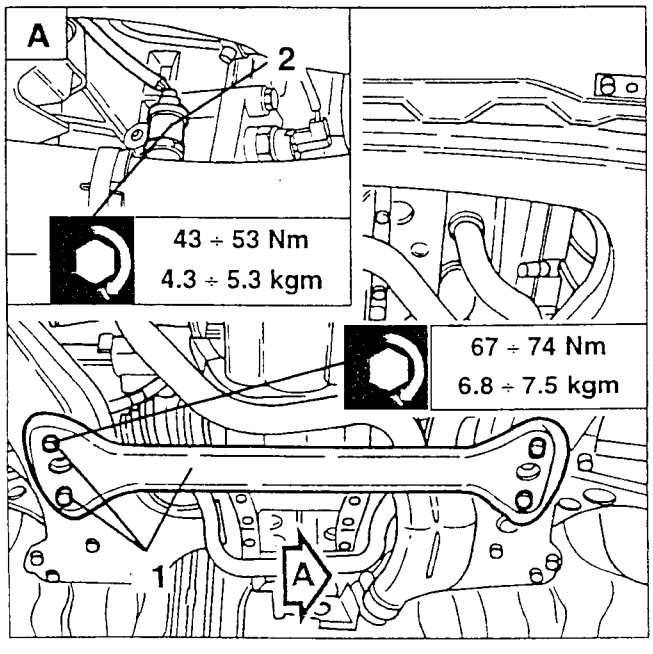

1. Slacken the nuts fastening the exhaust manifolds to the cylinder heads.

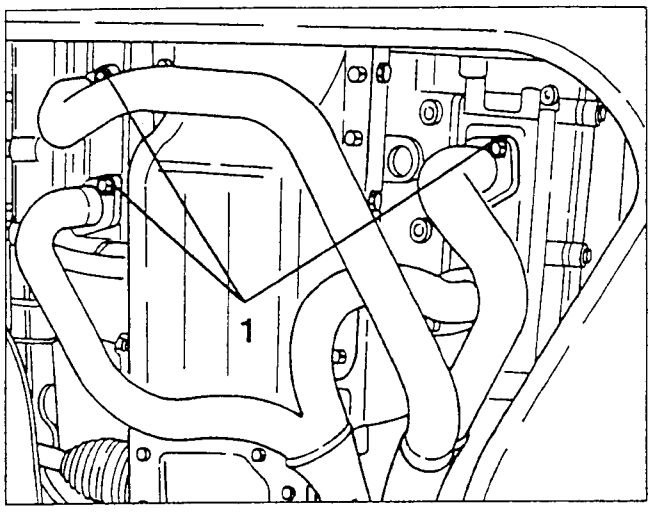

1. Slacken the two bolts fastening the exhaust manifolds to the catalytic converter.
2. Slacken the bolt fastening the exhaust manifold support bracket.

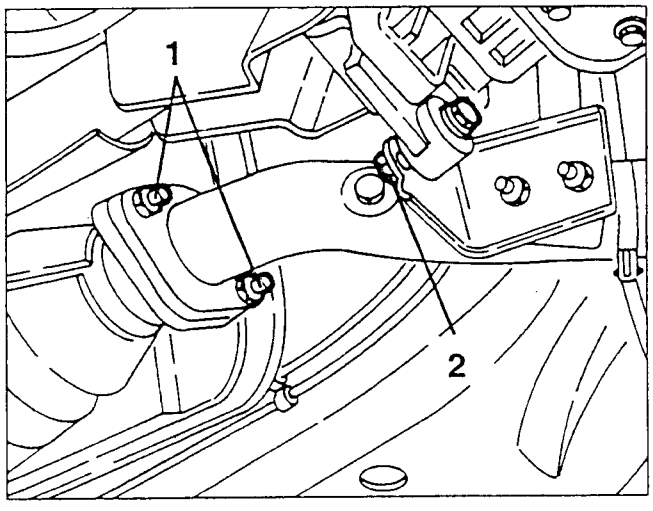

1. Remove the exhaust manifolds.
2. Remove the seals.

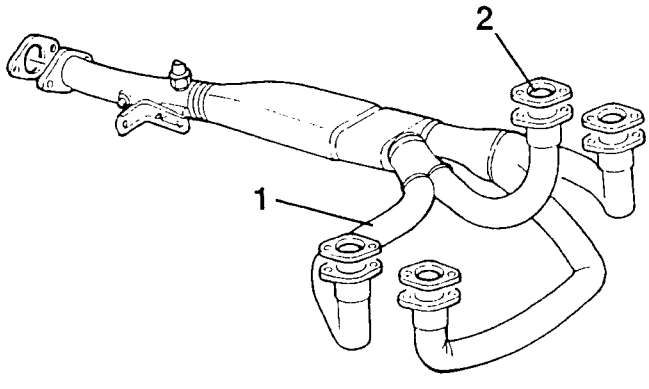

1. Slacken the bolts fastening the wishbones to the wheel uprights.

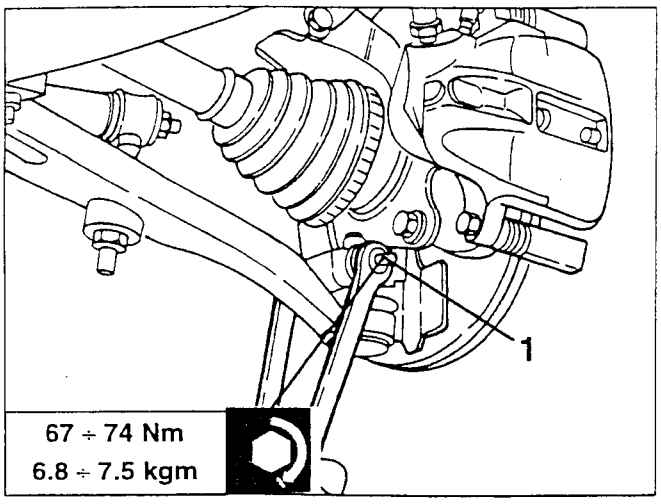

1. Suitably support the engine support frame with a hydraulic jack.
2. Slacken the two screws fastening the frame to the front flexible engine mount.
3. Slacken the two screws fastening the frame to the gearbox flexible mounts.
4. Slacken the screws fastening the frame to the body and remove it complete with wishbones and stabilizer bar.

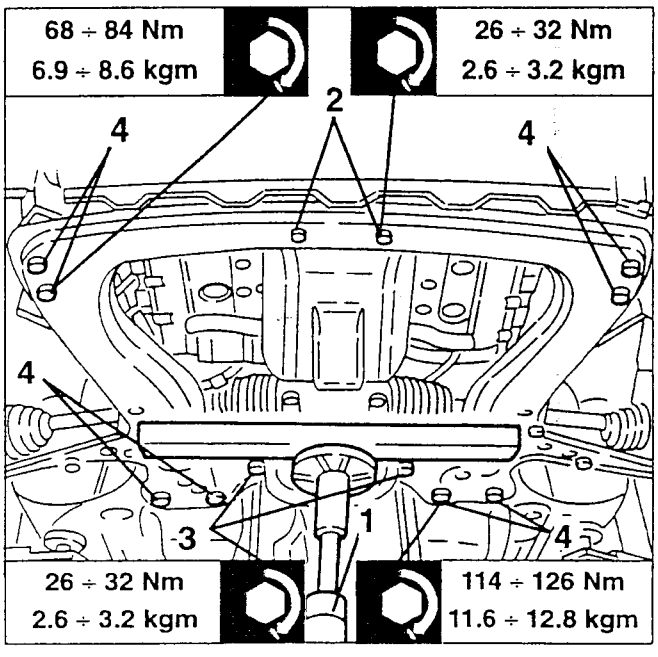

1. If necessary, remove the stabilizer bar, slackening the nuts of the U-bolts securing the nuts fastening the connecting rods to the wishbones.
2. If necessary, remove the wishbones slackening the nuts of the U-bolts.

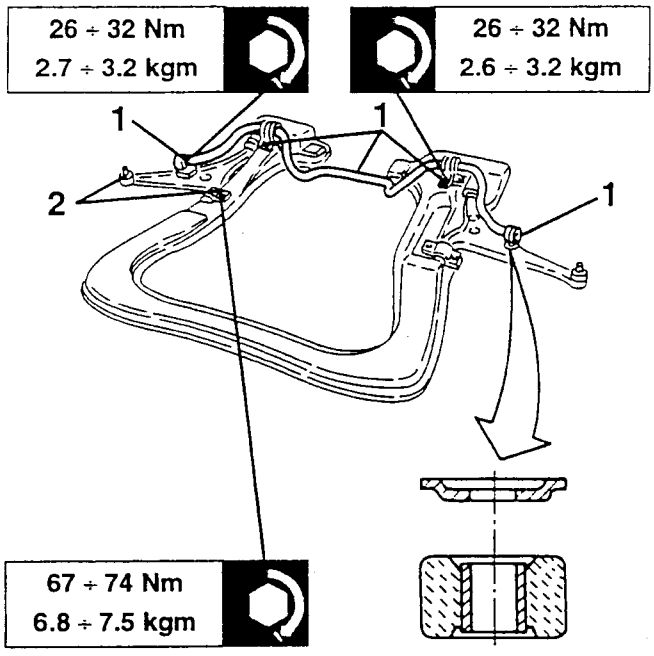

When refitting the stabilizer bar on the frame check that the washers are facing the flexible pad as illustrated, as incorrect assembly could compromise the life of the actual pad.

CHECKS AND INSPECTIONS

- Visually check the frame to make sure there are no cracks or distorsions that might adversely affect operation, if so, change it.
- Visually check the stabilizer bar for cracks and distorsions and change it if necessary.
- Check that the U-bolts joining the stabilizer bar to the frame are intact and free of distorsion or signs of oxidation, if not change them.
- Check that the flexible pads do not reveal signs of wear, if so, change them.

DESCRIPTION

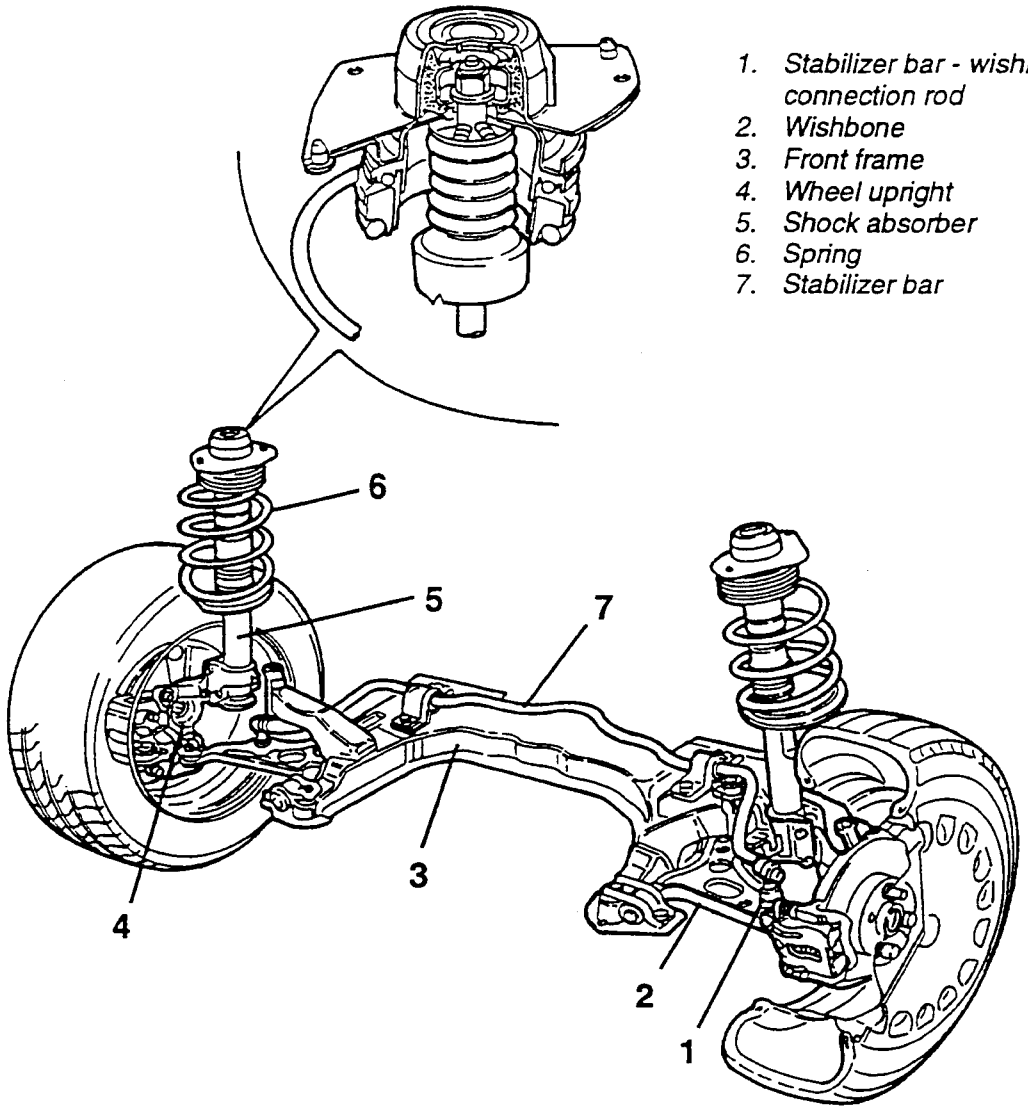

1. *Stabilizer bar - wishbone connection rod*
2. *Wishbone*
3. *Front frame*
4. *Wheel upright*
5. *Shock absorber*
6. *Spring*
7. *Stabilizer bar*

The front suspension to independent wheels is of the Mc Pherson type with telescopic struts and negative kingpin offset.
The front suspension assembly can be broken down into the following main components:
- The frame (3) supporting the power unit which is rigidly fastened to the body and besides integrating the bearing structure, it also supports the cast iron suspension wishbones (2).
- The telescopic struts which comprise the helical springs (6) and the shock absorbers (5).
The offset and tapered springs make it possible to reduce the thrust on the shock absorber stem and facilitate steering.
This solution also eliminates shock absorber noise when the car is on the move, consequently improving comfort.
The newly-designed shock-absorbers are pressurised with lamellar inlet valves with plates with particularly fine tolerances, thereby achieving outstanding results in terms of comfort and noiselessness over large obstacles while maintaining the necessary damping action.
- The cast iron wishbones (2), carry the ball joints connected with the wheel upright (4) and the silent-blocks with steel sheet reinforcement for fastening the wishbones themselves to the frame (3).
The rotation of the wishbones on the silent-block confers high transversal rigidity and low longitudinal rigidity to the suspension.
These operating conditions make it possible to:
- improve vehicle behaviour even under particularly critical roadholding conditions.
- improve driving comfort.
Increasing the rigidity of the suspension on one side of the vehicle and lowering it on the other, the stabilizer bar (7) serves to limit transversal inclination of the car body.
This makes it possible to increase the speed limits when cornering as it counters the increase in the roll of the body caused by the centrifugal stresses which occur as the speed increases.

HELICAL SPRING AND SHOCK ABSORBER ASSEMBLY

REMOVAL/REFITTING

- Remove the front wheel on the side concerned.
1. Disconnect the brake hose retainer grommet from the vertical guide with shock absorber.
2. Slacken the two bolts fastening the shock absorber guide to the wheel upright.

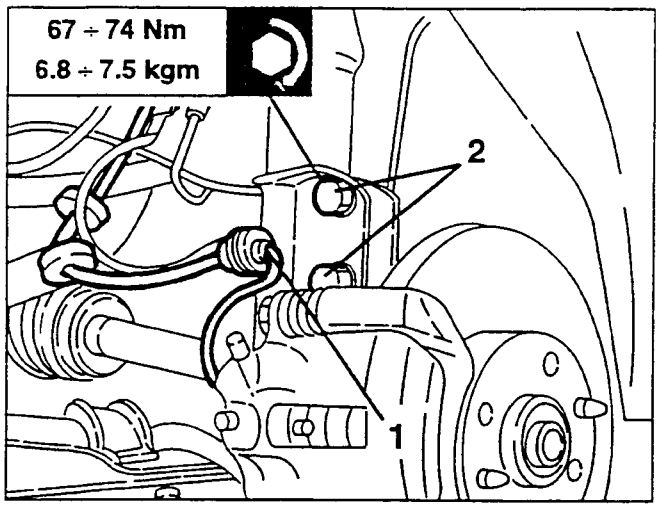

1. Using the shock absorber stem retainer tool N° 1.820.247.000, extension for wrench N° 1.822.134.000 and a 6 mm hexagon socket wrench, slacken the centre spring retainer nut.
2. Slacken the three screws fastening the shock absorber to the dome and remove the helical spring assembly and shock absorber.

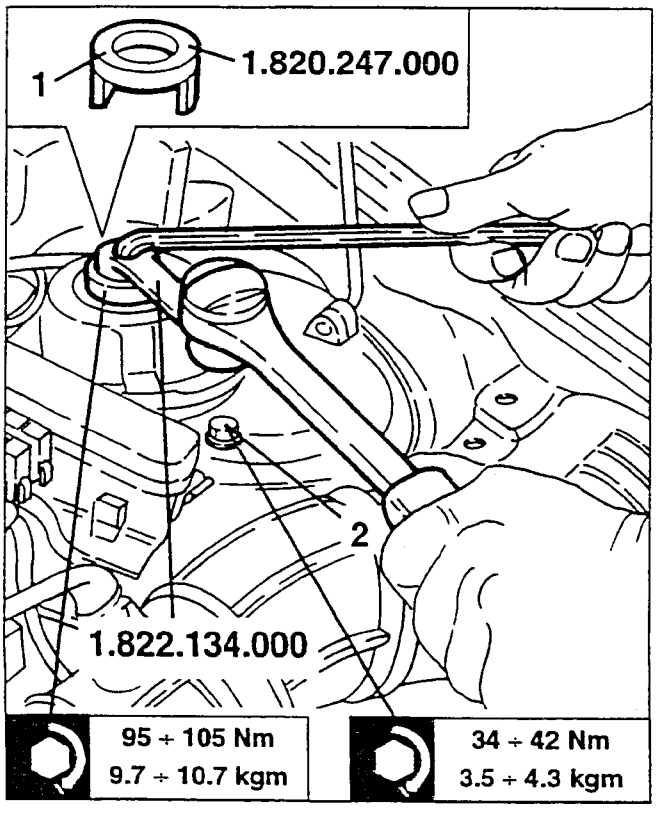

For tightening the spring retainer nut, use wrench N° 1.822.134.000 coupled to a torque wrench, therefore the true tightening torque must be calculated applying the following formula:

$$Cr = \frac{La \cdot Cn}{La + Lb}$$

La : length of torque wrench (in m)
Lb : length of wrench N° 1.822.134.000 (in m)
Cn : nominal torque (95 ÷ 105 Nm)

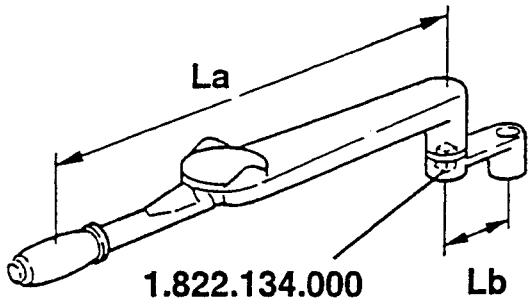

DIS-ASSEMBLY/RE-ASSEMBLY

1. Position the spring-shock absorber assembly on tool N° 1.820.089.000 fitted with resting plates N° 1.820.238.000 and blocks N° 1.820.608.000 and compress.

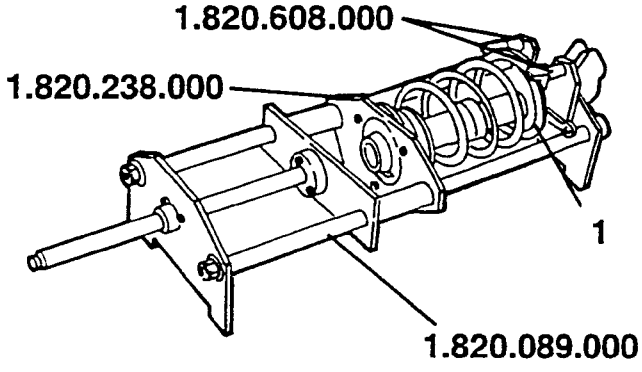

1. Using wrench N° 1.822.134.000 unscrew the spring retainer nut slackened previously.

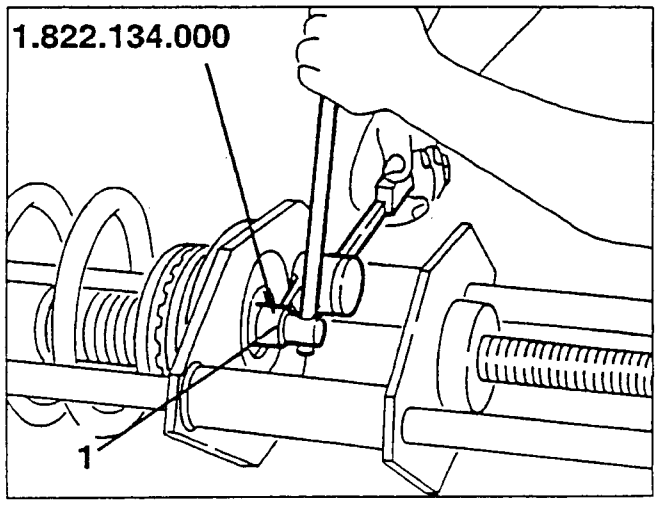

- Decompress the spring-shock absorber assembly and separate them.

For CHECKS AND INSPECTIONS proceed as described for the Boxer engines.

WISHBONE

REMOVAL/REFITTING

- Remove the front wheel on the side concerned.
1. Slacken the two bolts fastening the wheel upright to the shock absorber stem.

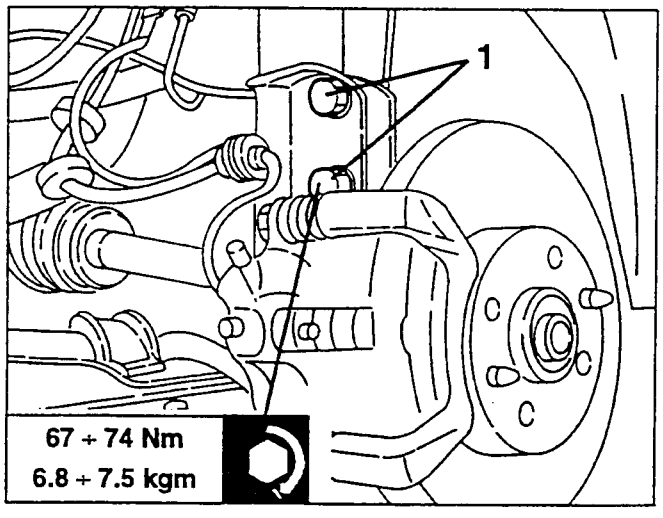

1. Slacken the nut fastening the connecting rod to the wishbone (1a) and remove it together with the rubber pad (1b) then slacken the nut fastening the connecting rod- stabilizer bar and remove it.
2. Slacken the bolt fastening the ball pin coupling the wishbone and wheel upright, then, using tool N° 1.821.169.000 (A.3.0633), disconnect the ball joint from the wishbone.

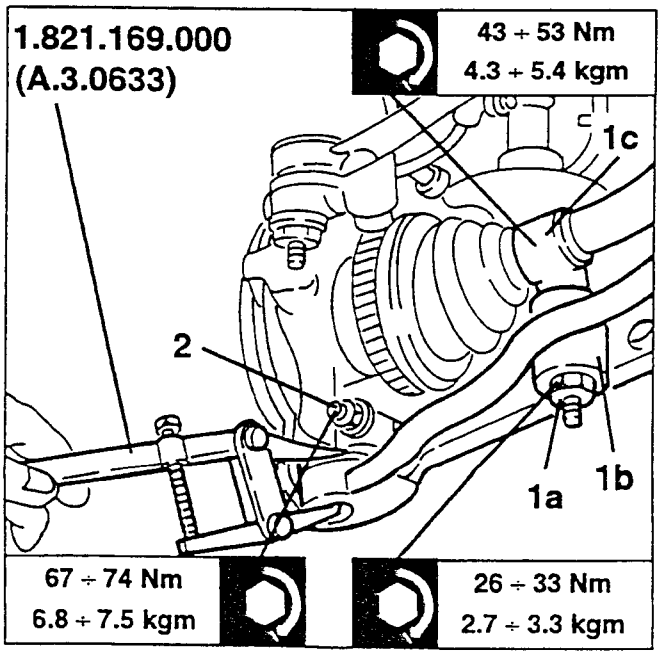

1. Slacken the screws fastening the U-bolts coupling the wishbone to the front crossmember and remove the wishbone.

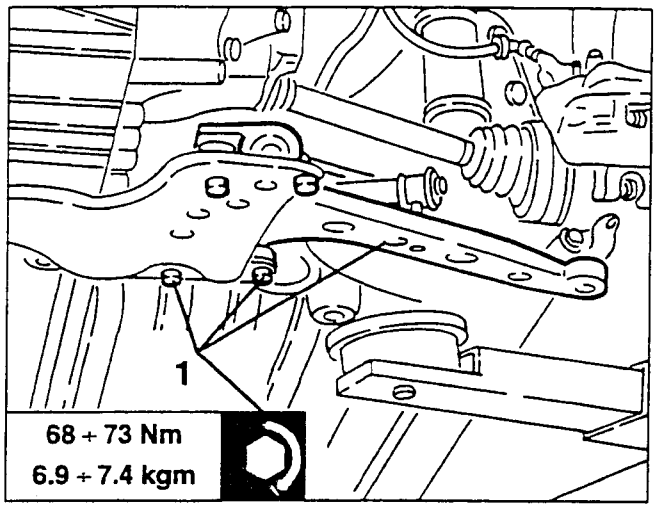

For CHECKS AND INSPECTIONS proceed as described for the Boxer engines.

FRONT CROSSMEMBER AND ANTIROLL BAR

REMOVAL/REFITTING

When needing to change only the antiroll bar or only the front crossmember it is still necessary to remove the whole crossmember, proceeding as described below:
- Remove the front section of the exhaust pipe (see GROUP 10).
1. Slacken the bolt fastening the ball pin coupling between the wishbone and the wheel upright, then using tool N° 1.821.169.000 (A.3.0633), disconnect the ball joint from the wishbone.

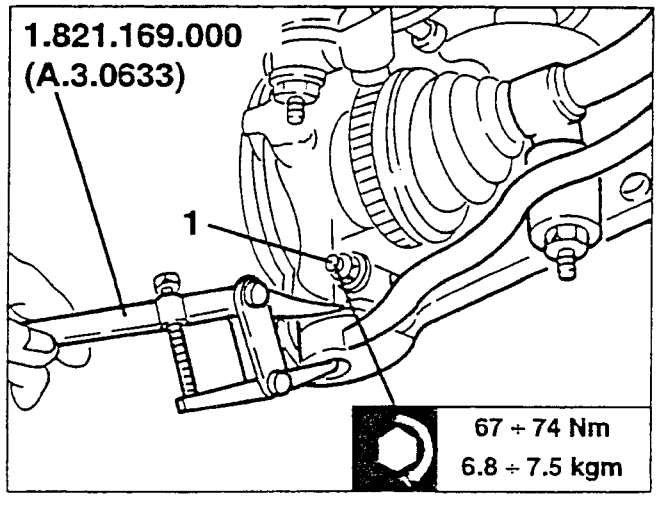

- Remove the power unit centre support (see GROUP 10).

1. Using a hydraulic jack, support the front crossmember.
2. Slacken the screws fastening the steering box to the crossmember.
3. Firstly slacken the two front screws (3a) fastening the crossmember to the body and then the six rear screws (3b) and (3c); then lower the jack and remove the front crossmember together with the stabilizer bar.

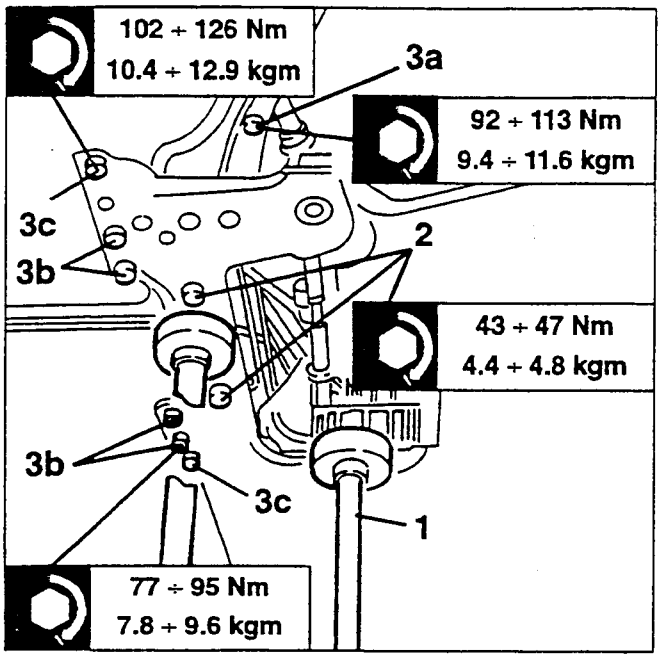

1. If necessary, remove the stabilizer bar, slackening the nuts fastening the U-bolts supporting the bar itself on the crossmember and the nuts fastening the stabilizer bar connecting rods to the wishbones.
2. If necessary, remove the wishbones.

- When refitting the stabilizer bar on the crossmember make sure that the washers are facing towards the rubber pad, as incorrect assembly might adversely affect the life of the pad itself.

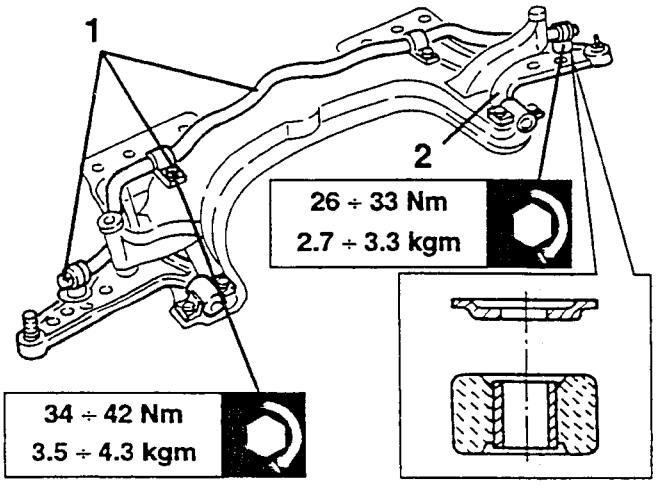

- When refitting the front crossmember it is necessary to fasten it temporarily using two 17.5 mm diameter pins, centre it with the holes on the body and then fasten it definitively tightening the screws to the specified torque.

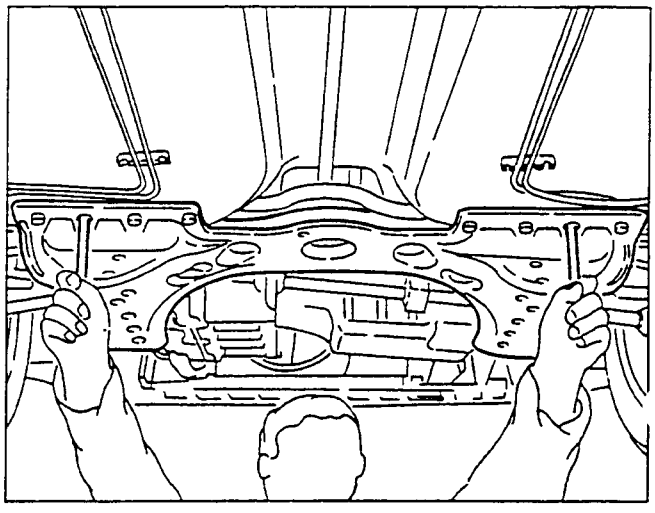

CHECKS AND INSPECTIONS

1. Visually check the crossmember for cracks and distorsions that might adversely affect its operation and change it, if necessary.
2. Visually check the stabilizer bar for cracks and distorsion and change it if necessary.
3. Check that the U-bolts connecting the stabilizer bar to the crossmember are intact and show no signs of distorsion or oxidation and if necessary, change them.
4. Check the rubber pads for signs of wear and change them if necessary.
5. Check that the ball pins connecting the stabilizer bar to the wishbones are intact and show no signs of distorsion or oxidation, if necessary, change them.

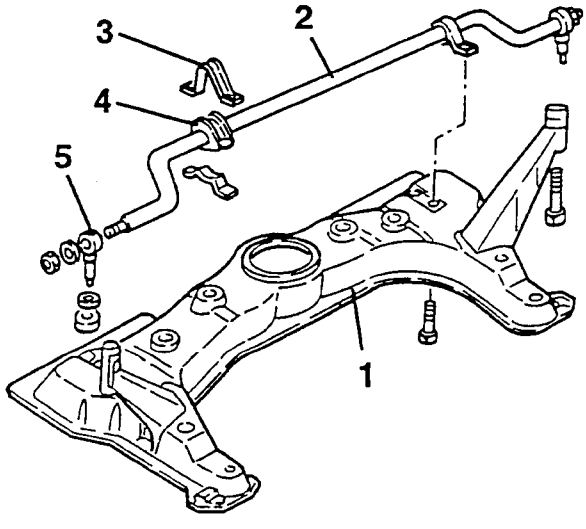

DESCRIPTION

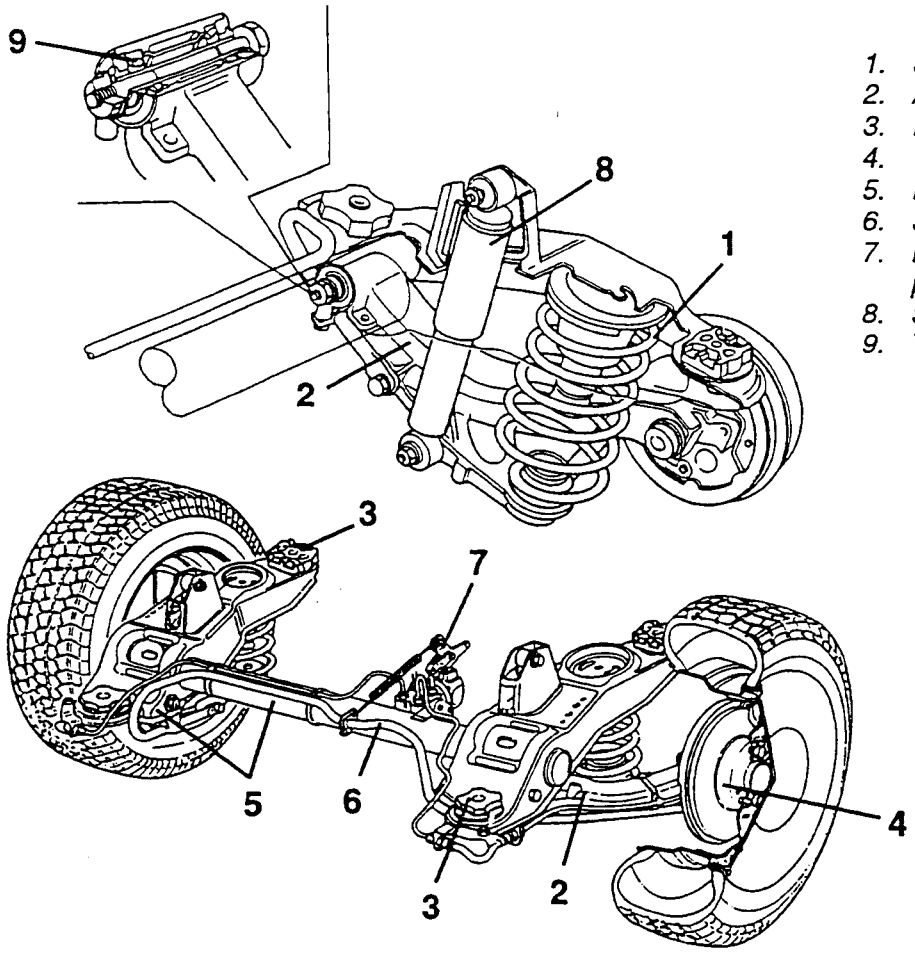

1. *Spring*
2. *Arm*
3. *Flexible pad*
4. *Wheel hub*
5. *Rigid axle*
6. *Stabilizer bar*
7. *Braking load proportioning valve*
8. *Shock absorber*
9. *Taper roller bearings*

The rear suspension to independent wheels with longitudinal arms offers the advantage of being significantly reduced in size thereby enabling the adoption of a particularly low and wide luggage compartment.
The inherent problem with this type of suspension is that the wheels vary their inclination following the rolling of the vehicle.
This has been solved through the adoption of a stabilizer bar integral with the longitudinal arms.
The rear suspension assembly can be broken down into the following main components:
- Rear rigid axle (5), in tubular sheet metal, fastened to the body through flexible plugs (3).
- Longitudinal arms (2) integrated with the axle by screws and hinged on taper roller bearings (9). They support the wheel hub (4) and part of the braking system.
- The stabilizer bar (6) connected to the longitudinal arms limits the transversal lean of the car and by its own rotation also controls the operation of the braking load proportioning valve (7) which is connected to it.
- Helical springs (1) which limit the thrust on the shock absorber stem.
- Shock absorbers (8) which are pressurized with lamellar inlet valves that warrant a high degree of riding comfort.

SHOCK ABSORBERS

REMOVAL/REFITTING

- Set the car on a lift.
- Remove the wheel on the side concerned.

1. Raise the car and using a hydraulic jack placed under the longitudinal arm, preload the spring.
2. Slacken the lower nut fastening the shock absorber to the suspension longitudinal arm.

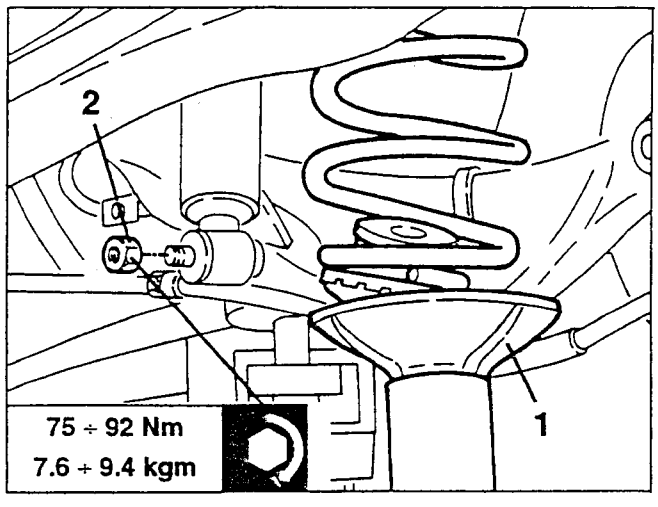

1. Remove the protective cap covering the access hole containing the upper shock absorber fastening screw.
2. Working through the wheel arch unscrew the upper shock absorber fastening screw.

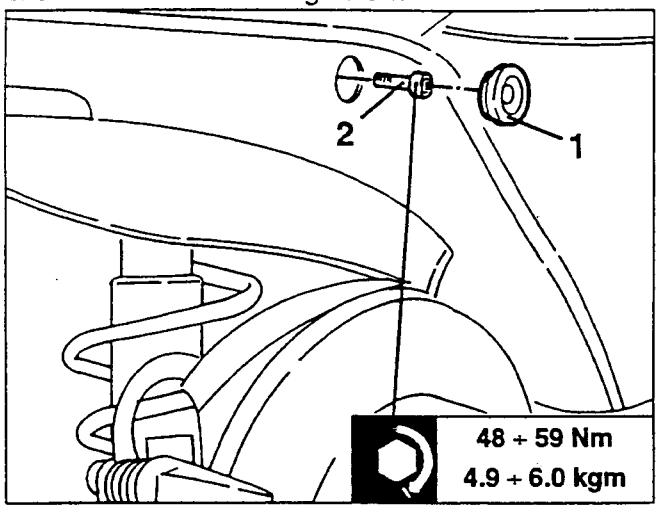

NOTE: As the body is boxed around the area affected by the operation, pay particular attention not to drop the screw inside the boxed section.

1. Remove the shock absorber.

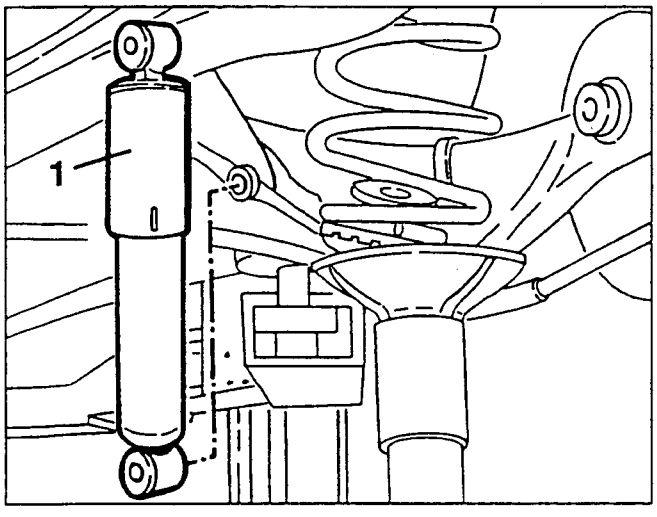

CHECKS AND INSPECTIONS

- Check that the shock absorber is working properly and does not leak, when necessary, always replace the whole shock absorber.

HELICAL SPRING

REMOVAL/REFITTING

- Set the car on a lift.
- Remove the wheel on the side concerned.

1. Slacken the fastening screw of the handbrake cable and brake hose support bracket.
2. Slacken the screws fastening the stabilizer bar on both sides of the suspension.

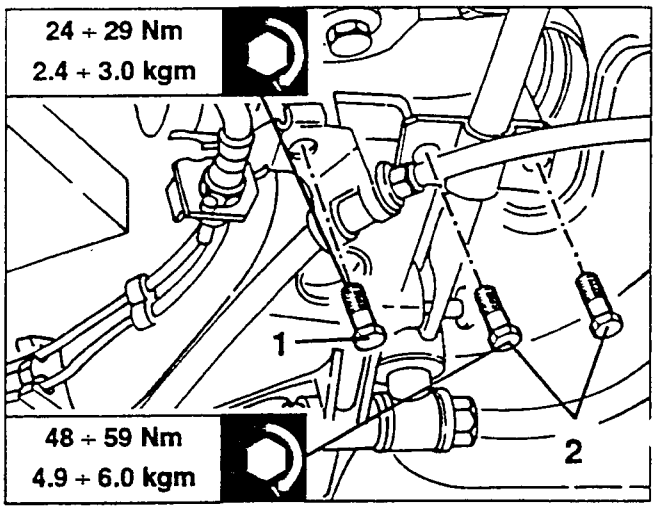

1. Place a hydraulic jack under the longitudinal arm and preload the spring.
2. Slacken the shock absorber fastening bolt.

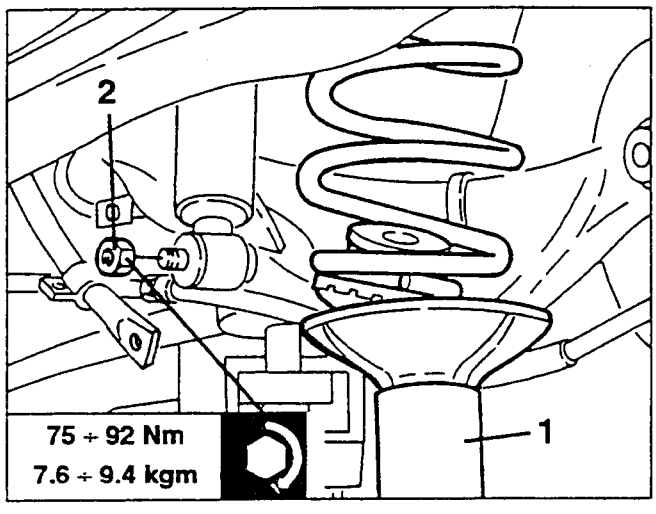

1. Lower the hydraulic jack and remove the spring complete with rebound rubbers.

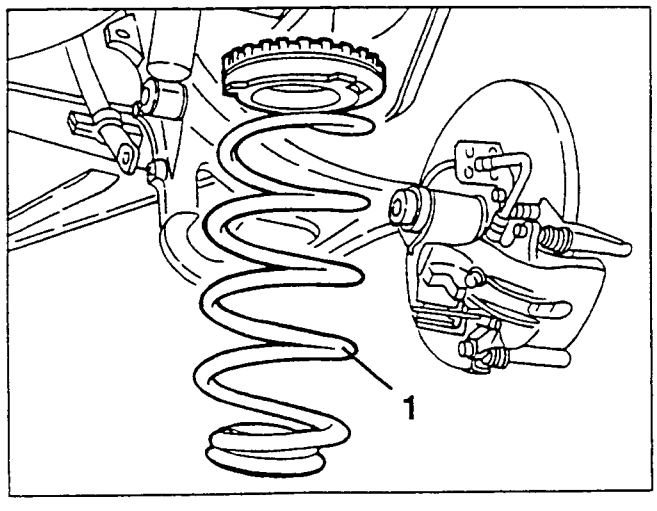

STABILISER BAR

REMOVING/REFITTING

- Set the car on a lift.
- Remove the fuel tank (see GROUP 10).

1. Slacken the bolt and disconnect the braking load proportioning valve spring from the stabiliser bar.

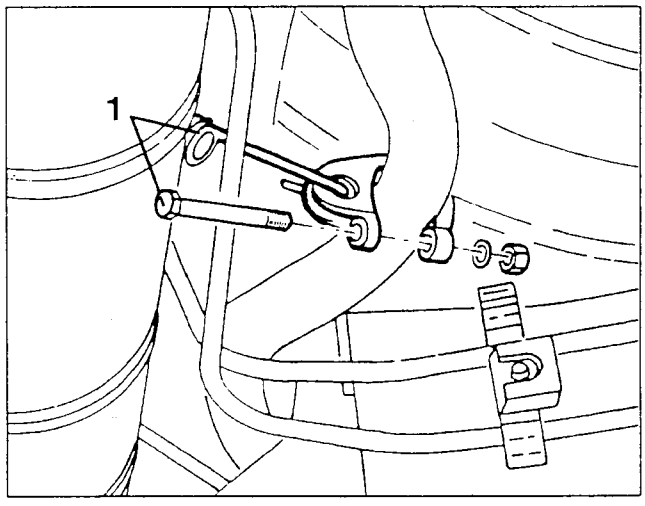

- Slacken the two nuts fastening the first exhaust silencer guard.
- Slacken the screw fastening the exhaust pipe rear support, then lower it as required.

1. Slacken the three screws per side fastening the stabiliser bar, then remove it.

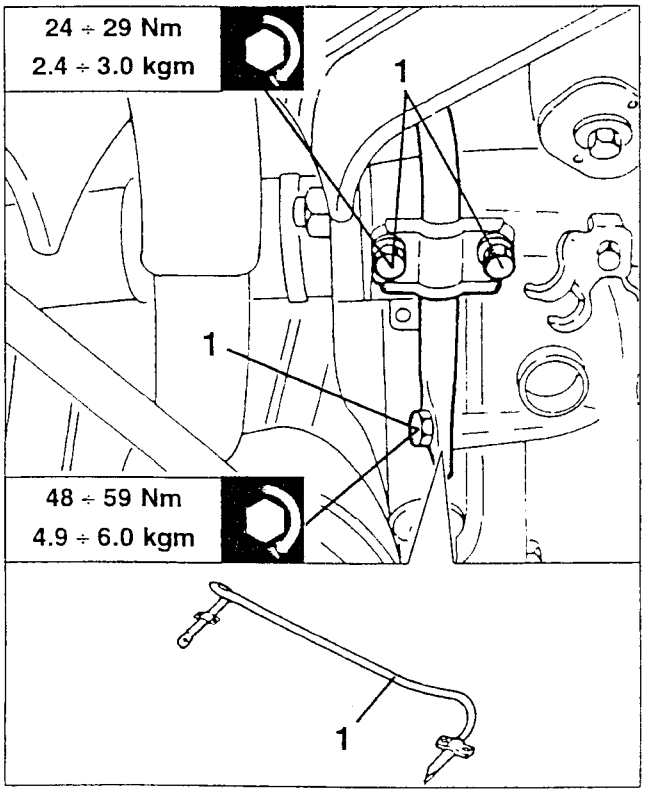

WARNING:
When refitting adjust the braking load proportioning valve (see GROUP 33).

LONGITUDINAL ARM

REMOVING/REFITTING

- Remove the the wheel hub (see specific paragraph).

1. Slacken the fastening screw and remove the A.B.S. inductive sensor.
2. Slacken the fastening screw and remove the brake piping support bracket.

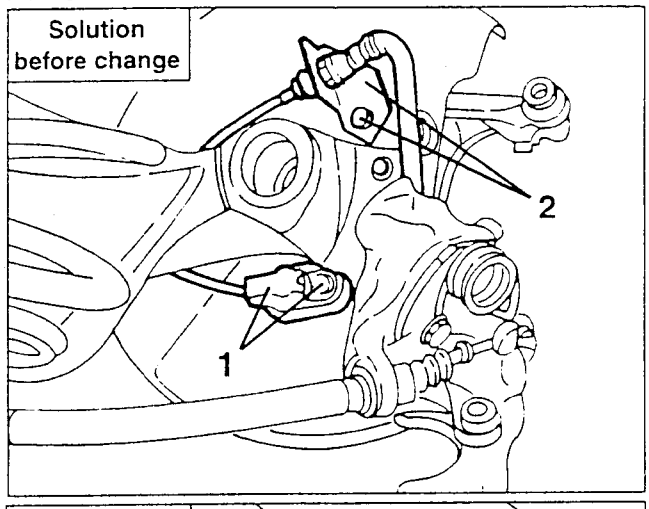

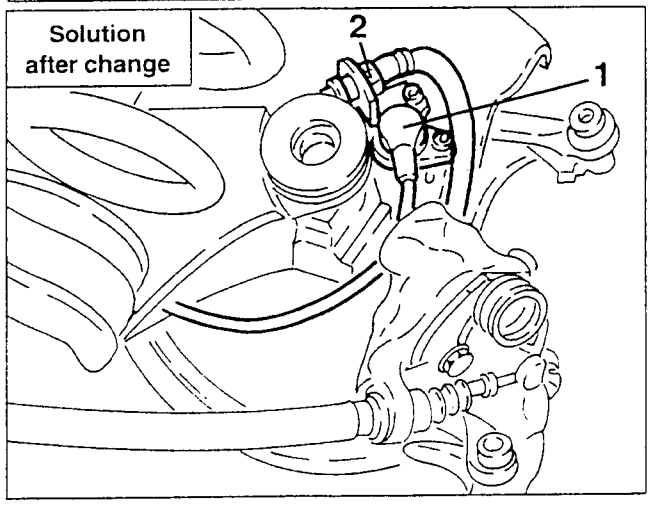

Solution before change

1. Slacken the two fastening screws and remove the brake caliper support and retrieve the spacer.

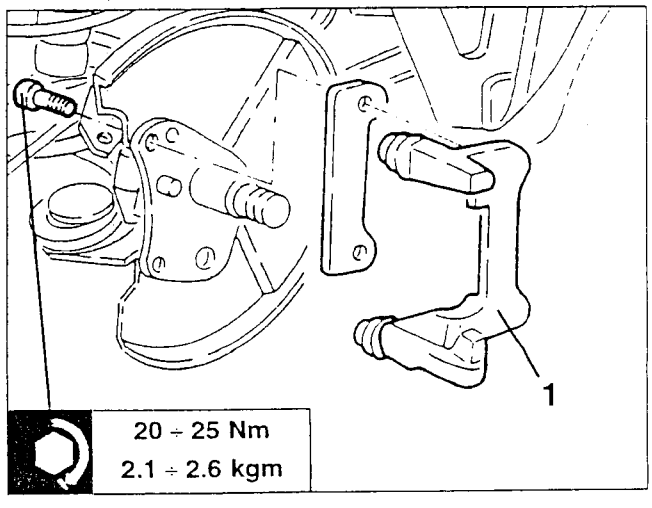

Solution after change

1. Slacken the two fastening screws and remove the brake caliper support.

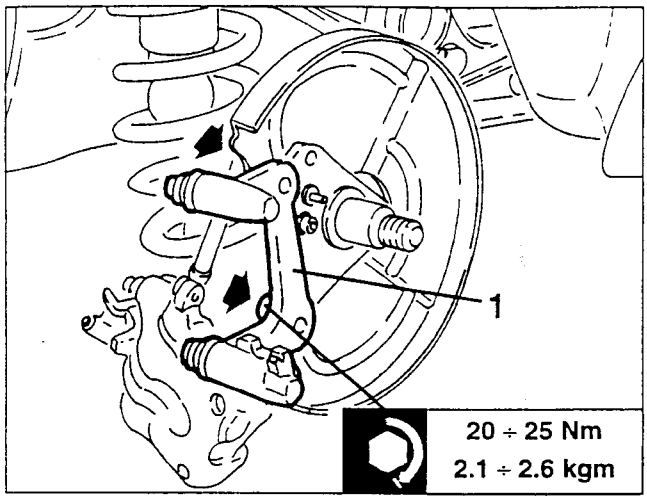

1. Slacken the two fastening screws and remove the brake disk guard and stiffener plate.

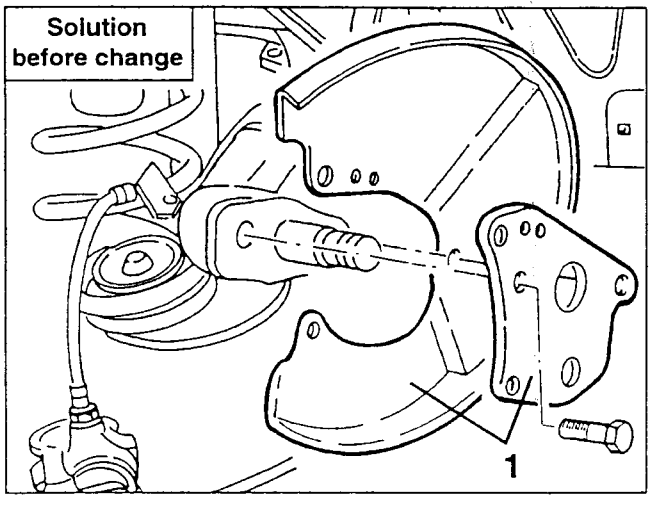

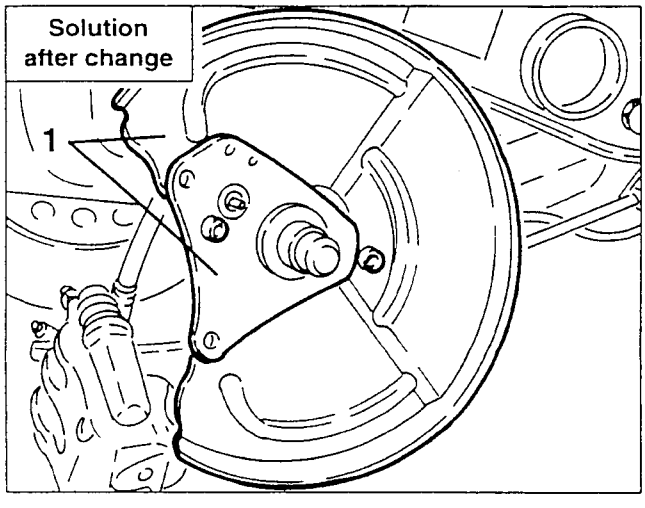

1. Slacken the screw fastening the handbrake cable support bracket, brake pipe and A.B.S. sensor cable.
2. Slacken the three screws per side fastening the stabiliser bar.

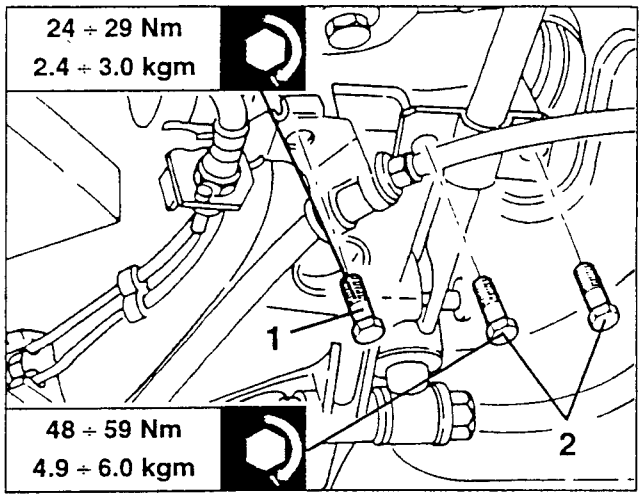

1. Set a hydraulic jack under the longitudinal arm of the suspension and preload the spring.
2. Slacken the shock absorber lower fastening bolt, lower the hydraulic jack and remove the spring.

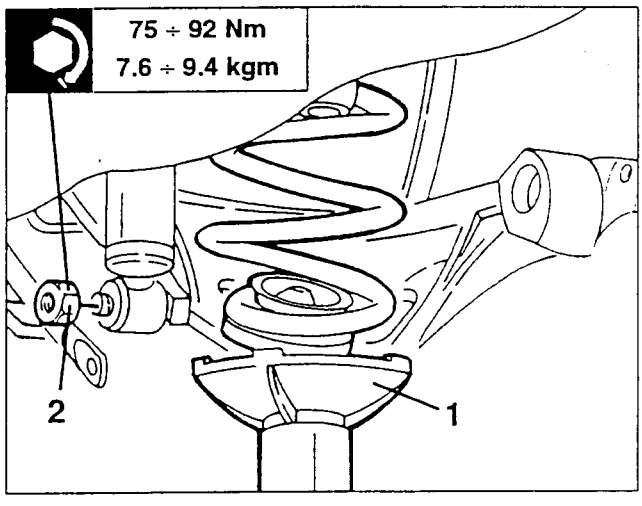

1. Slacken the fastening bolt and remove the longitudinal arm.

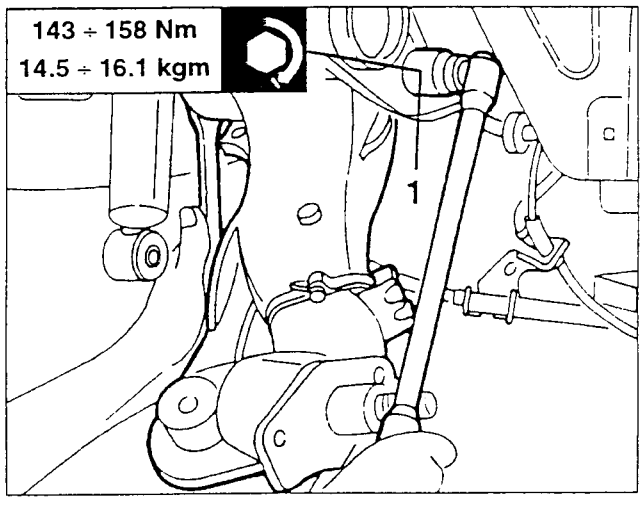

RIGID REAR AXLE

REMOVAL/REFITTING

- Set the car on a lift.
- Remove the rear wheels.
- Remove the fuel tank and the rear section of the exhaust pipe (see GROUP 10).
- Remove the stabilizer bar (see specific paragraph).

1. Slacken the screws fastening the A.B.S. sensor and brake hose support bracket.

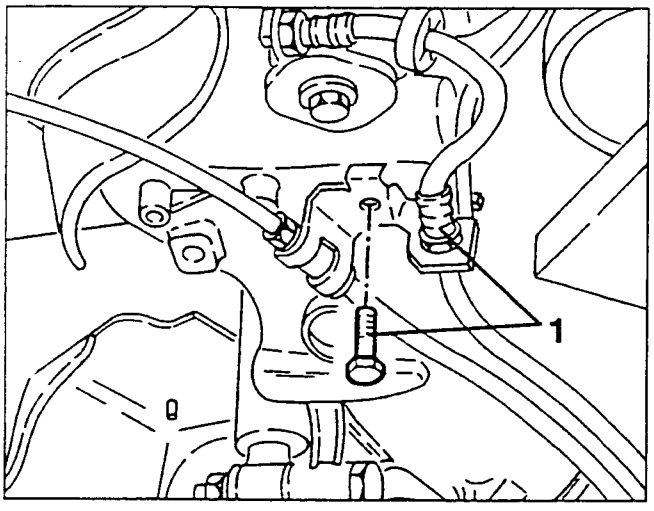

1. Slacken the two screws fastening the brake caliper without disconnecting it from the pipes and cables.

When refitting replace the screw securing the brake calipers and tighten them to the specified torque.

2. Slacken the fastening screw and remove the A.B.S. inductive sensor.
3. Slacken the fastening screw of the brake pipe support plate from the disk guard.

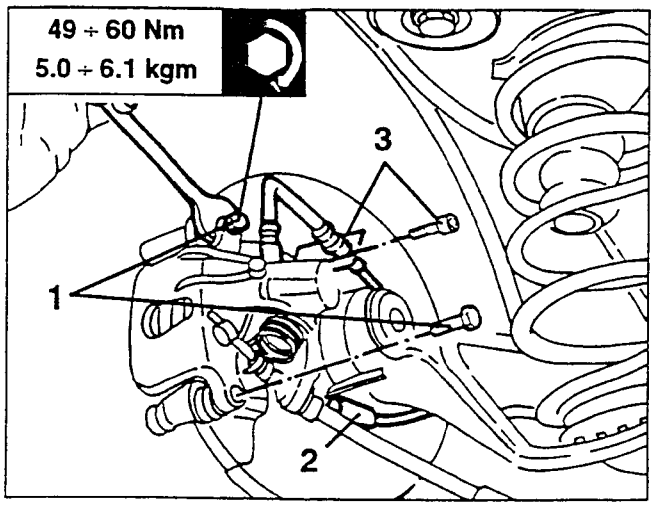

- Move aside the brake calipers complete with pipes and cables so that they do not hinder the subsequent operations

1. Using a hydraulic jack, placed under the suspension longitudinal arm, preload the spring.

2. Slacken the shock absorber lower fastening bolt, lower the hydraulic jack and remove the spring.

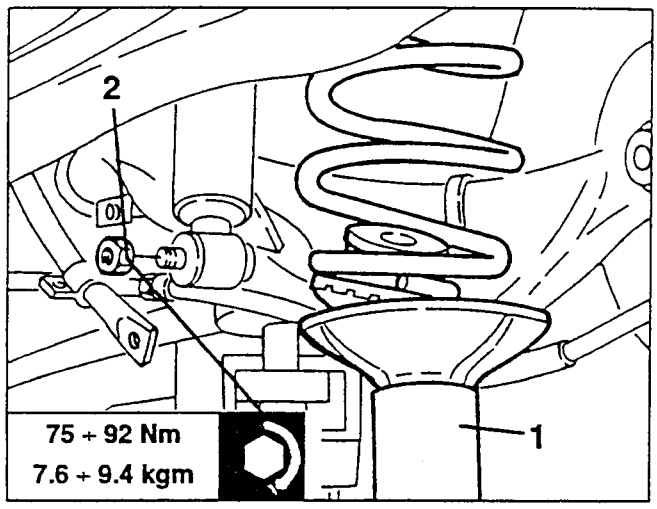

1. Slacken the fastening bolt and remove the longitudinal arm complete.

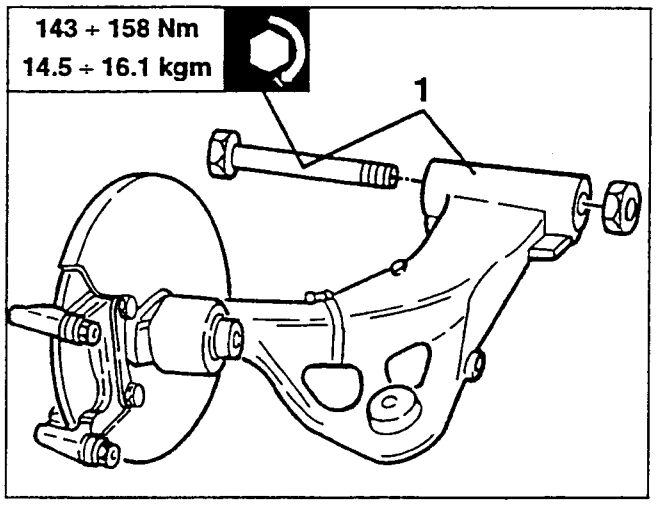

- Remove the other longitudinal arm in the same manner.

1. Place a hydraulic jack fitted with tool N° 1.820.003.000 under the rear axle.

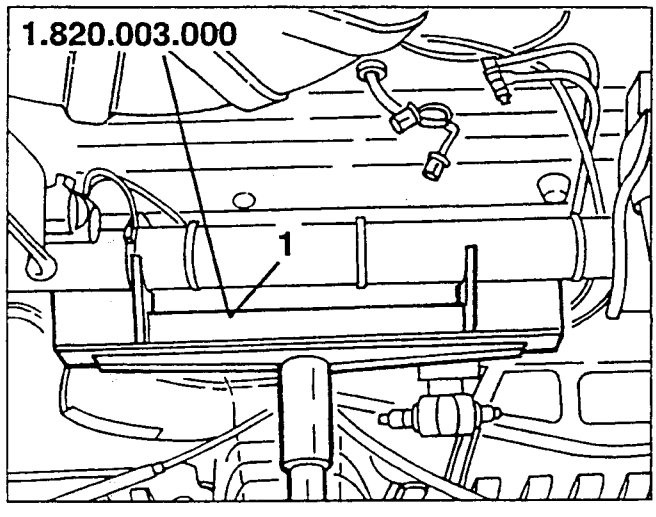

1. Slacken the braking load proportioning valve fastening screws.
2. Free the brake pipes from the fasteners on the axle.

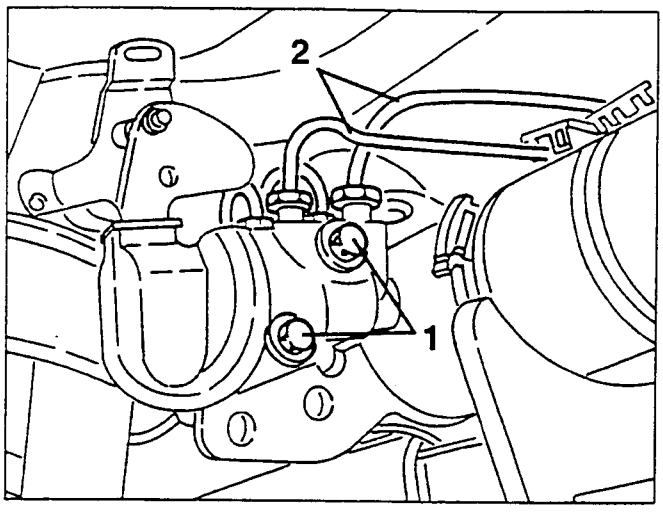

1. Slacken the two screws per side fastening the rigid axle flexible mounts to the body.

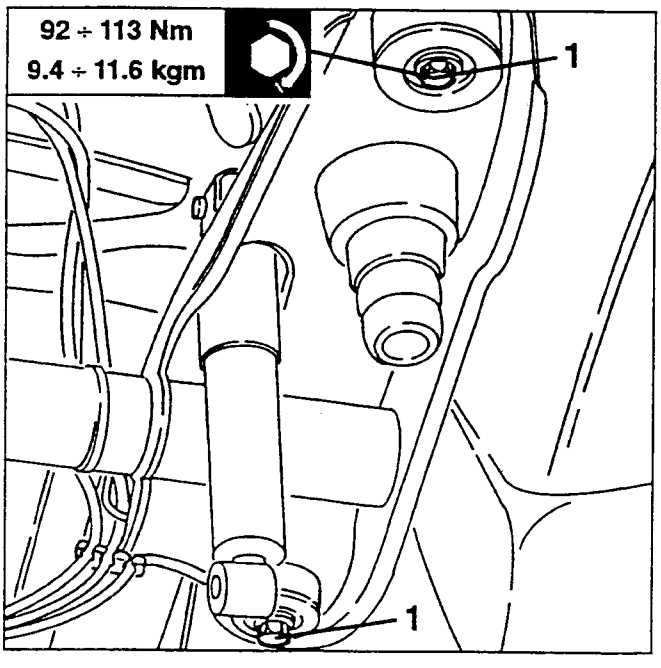

1. Lower the hydraulic jack and remove the rigid axle.
2. If necessary, slacken the shock absorber upper fastening bolts and separate them from the axle.

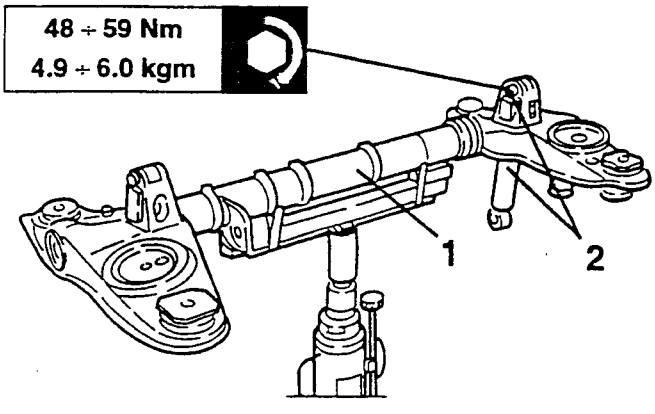

CHECKS AND INSPECTIONS

- Check the rear rigid axle for distorsions, cracks or misalignment between the two side arms.
- Check the conditions of the rebound rubbers.
- If any of the above faults are encountered, replace the whole axle.

FRONT WHEEL UPRIGHT (Boxer versions)

REMOVAL/REFITTING

1. Slacken the fastening screw and remove the inductive A.B.S. sensor from the wheel upright.
2. Disconnect the brake pad wear sensor cable and the brake hose from the coupling on the shock absorber.

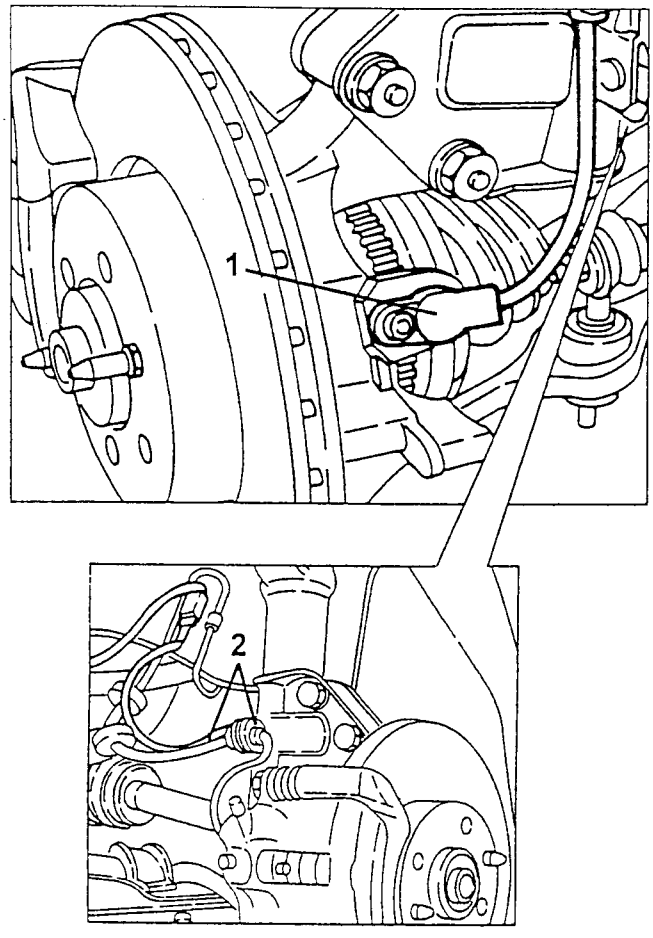

1. Remove the caulking and slacken the nut fastening the axle shaft to the wheel hub.

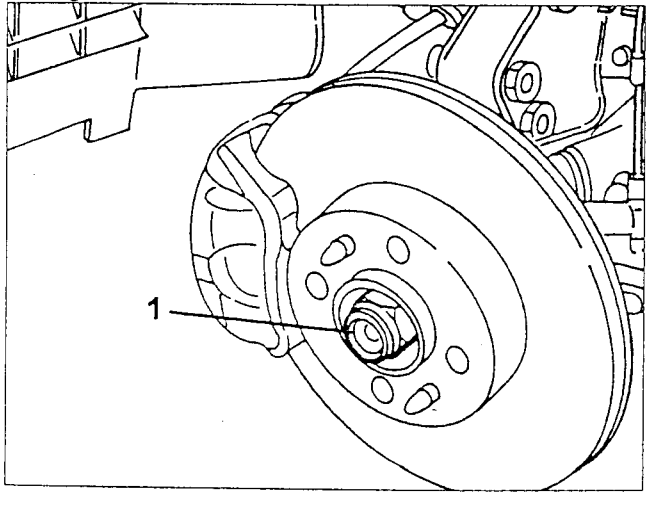

1. Slacken the two brake caliper fastening screws, then move it aside without disconnecting the pipe.

When refitting, change the brake caliper fastening screws and tighten them to the specified torque.

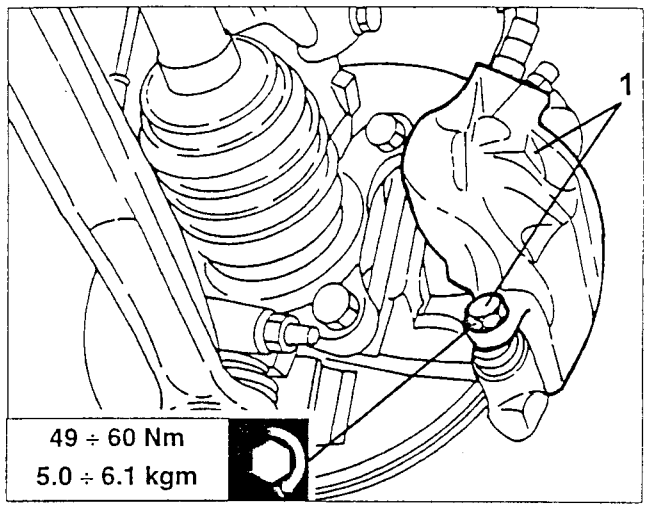

1. Slacken the two pins and remove the spacer and brake disk.
2. Slacken the remaining fastening screw and remove the brake disk protective cover.

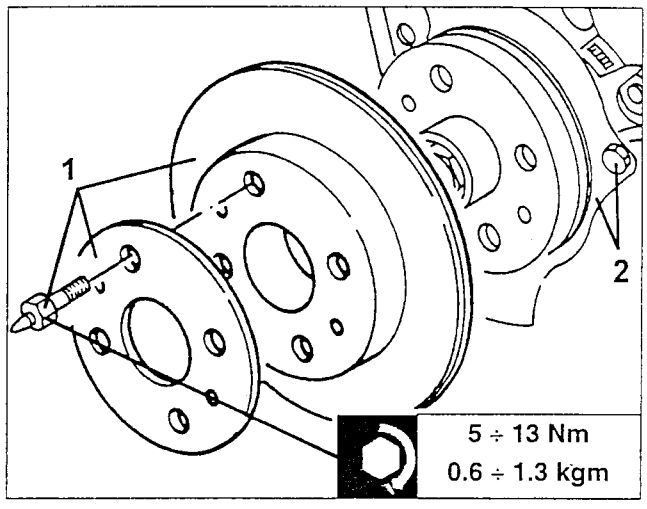

1. Slacken the bolt fastening the wishbone to the wheel upright.
2. Slacken the three bolts fastening the wheel upright to the shock absorber stem, then remove it.

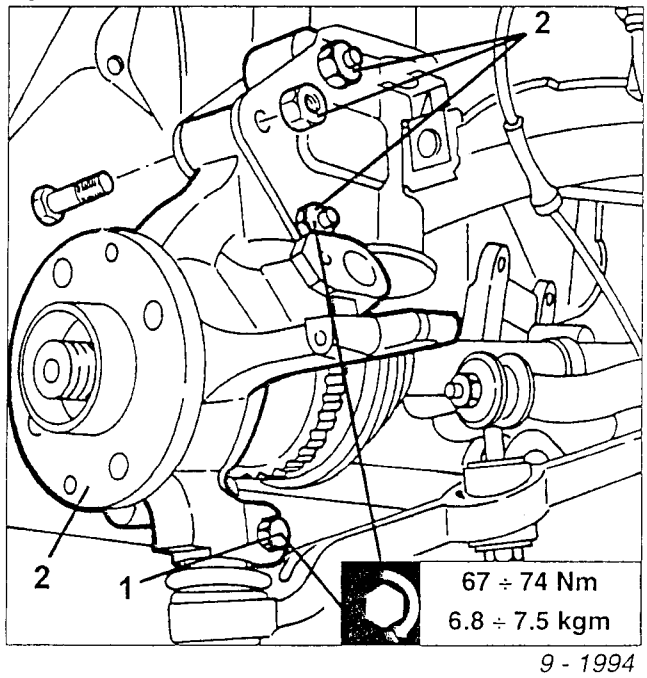

When refitting, caulk the wheel hub fastening nut, proceeding as described below:
- Always use a new nut.
- Carefully clean the threaded tang of the axle shaft using a metal brush and then blowing with compressed air.
- Clean the axle shaft tang thread with ethyl spirits or heptane.
- Tighten the new nut to the specified torque.

Before change	266 ÷ 294 Nm 27.1 ÷ 30.0 kgm
After change	67 ÷ 74 Nm + 62° (*) 6.8 ÷ 7.5 kgm + 62°

(*): Check that the maximum torque when tightening 62° is between 200 and 360 Nm

- For angle tightening the nut use tool no. 1.820.622.000 as illustrated.

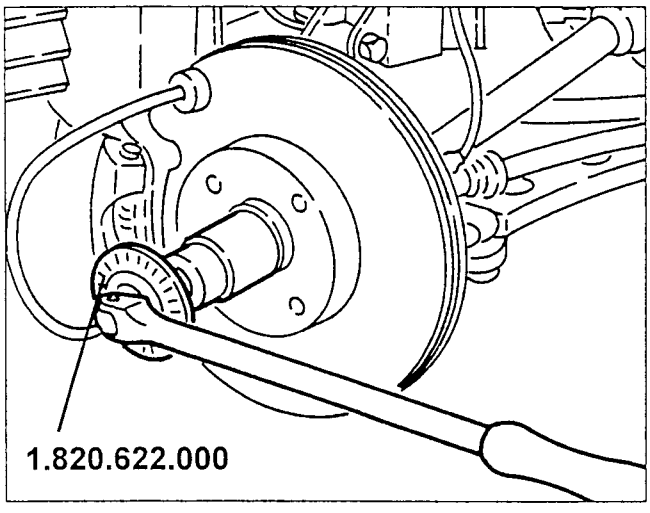

1. Using a chisel, caulk the nut collar with one or two caulks as illustrated.

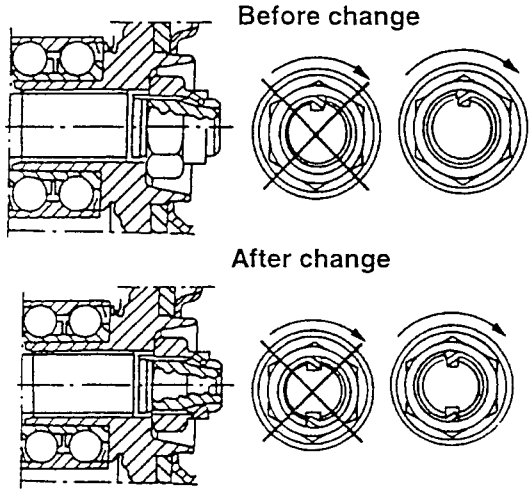

DISASSEMBLY

- Place the complete upright in a vice grip with protective jaws and remove the hub retainer circlip.

1. Working on the press and using puller tool no. 1.821.051.000 withdraw the wheel hub from the upright.

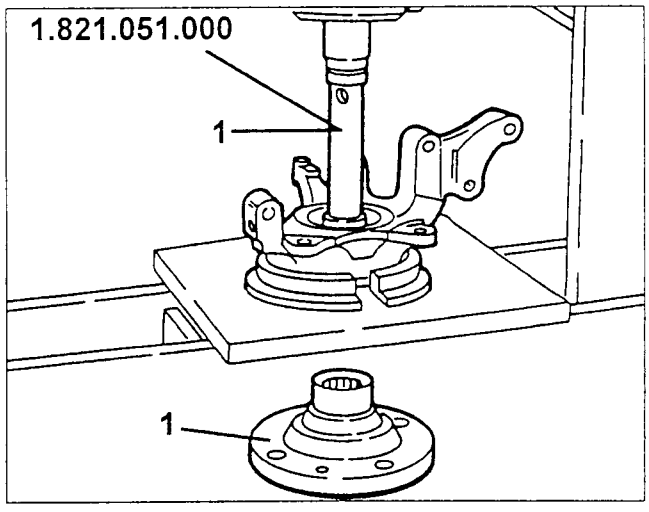

1. Working on the press, using support no. 1.821.149.000 and puller tool no. 1.821.045.000 remove the bearing outer race from the upright.

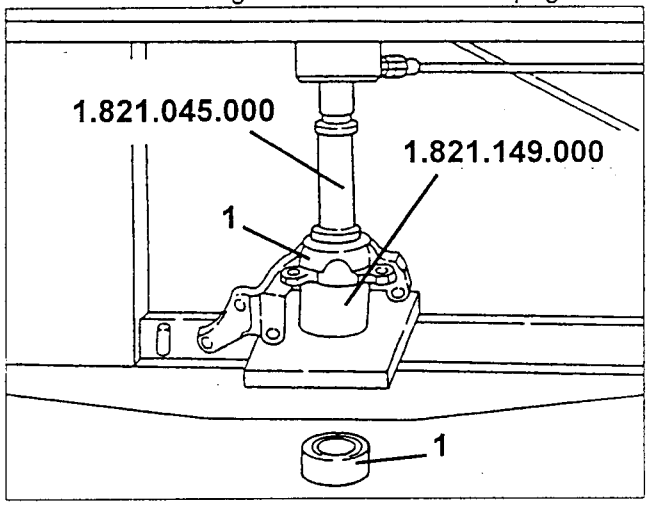

- Move the bearing inner race away from the wheel hub contact using a suitable tool.
1. Working on the press, and using plate no. 1.820.047.002, half rings no. 1.820.223.000 and puller tool no. 1.821.051.000, withdraw the bearing inner race from the wheel hub.

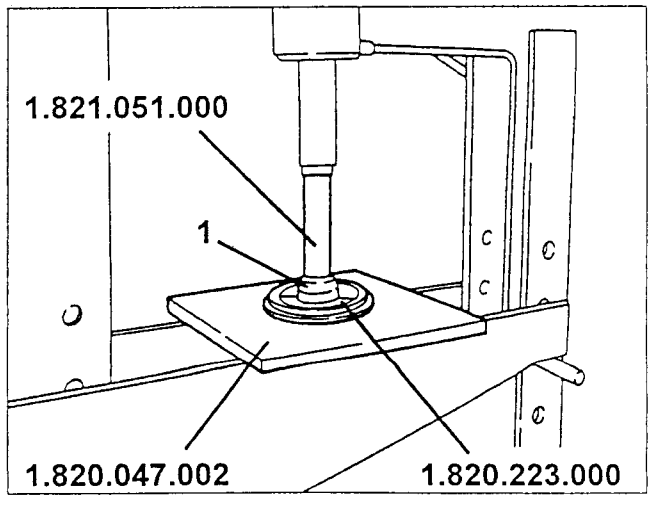

CHECKS AND INSPECTIONS

1. Check the inner surfaces of the wheel upright for traces of seizing and the wishbones for damage and obvious signs of bumps, distorsion or traces of breakage and change the upright if necessary.
2. Check the surfaces of the wheel hub for damage and obvious signs of bumps or traces of breakage and change it if necessary.
3. Check the conditions of the roller bearing for cracks, seizing or sticking and if necessary change the bearing.
4. In any case, always change the C.V. joint locknut before refitting.
5. Check the conditions of the ball pin fastening the wheel upright to the wishbone for distorsion, excessive wear, cracks, sticking or signs of oxidation and, if necessary, change the ball pin.

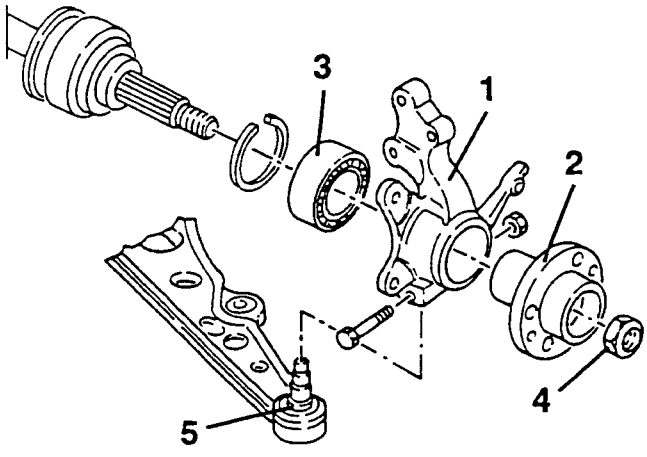

RE-ASSEMBLY

1. Working under the press and using installing tool N° 1.821.209.000 insert the bearing in the wheel upright.

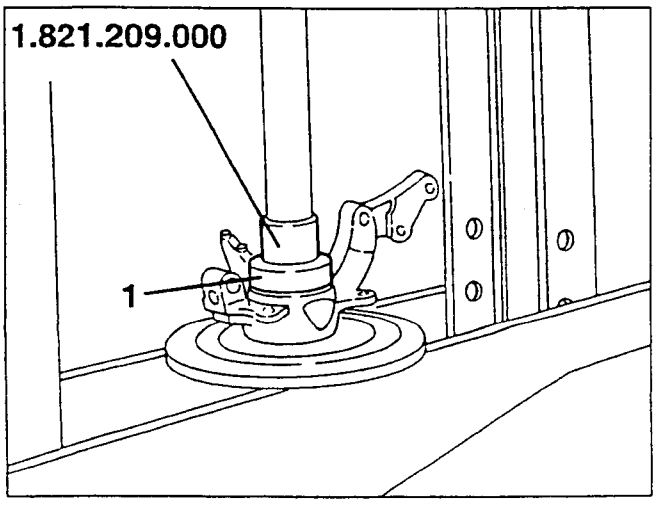

1. Working under the press and using tool N° 1.821.209.000, overturned with respect to the previous step, insert the hub in the wheel upright.

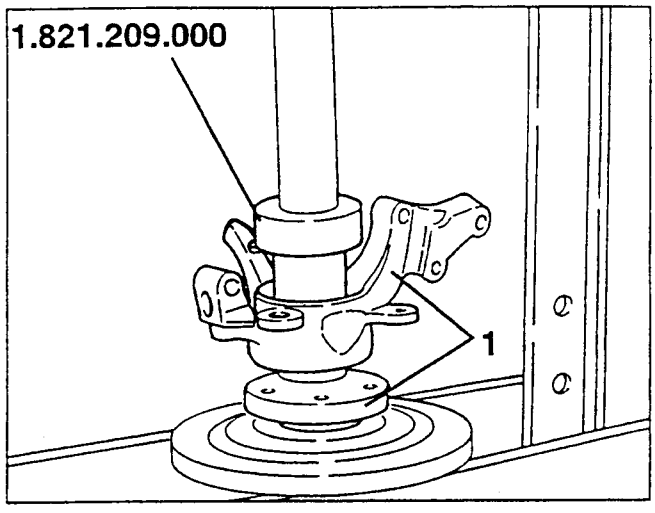

1. Install the bearing retainer ring in the housing on the wheel upright.

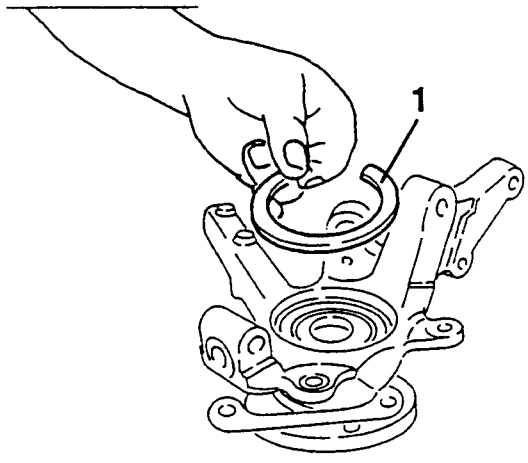

FRONT WHEEL UPRIGHT (Turbodiesel and T. Spark 16V versions)

REMOVAL/REFITTING

1. Remove the caulking and slacken the nut fastening the wheel hub to the constant velocity joint.
- Remove the complete caliper and set it aside without disconnecting the brake piping (see GROUP 33).
2. Slacken the nut of the ball joint connecting the side track rod to the wheel upright.
3. Using tool no. 1.821.169.000 (A.3.0633), disconnect the ball joint from the wheel upright.
4. Slacken the bolt connecting the wishbone to the upright and pull it off the ball pin.
When refitting, tighten the nut fastening the axle shaft to the wheel hub as deescribed for the "Front wheel upright (Boxer versions)".

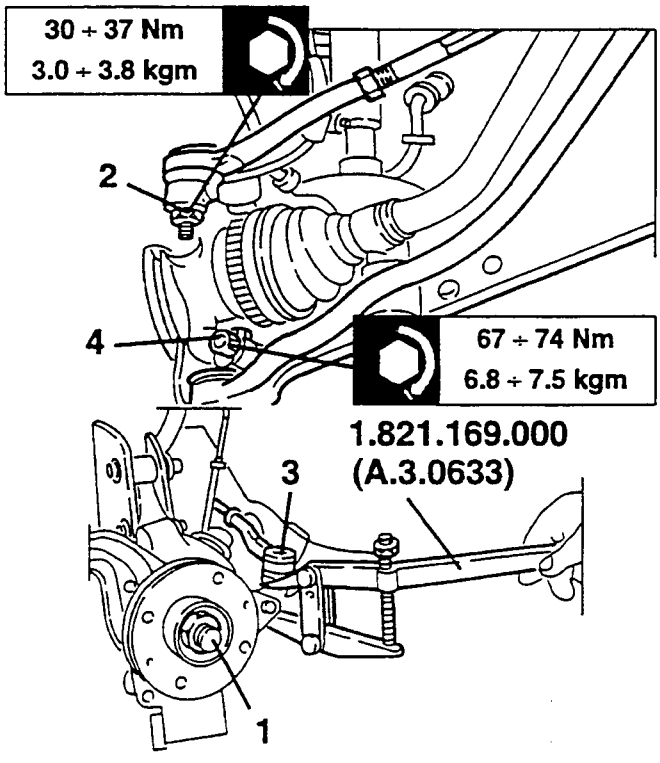

1. Slacken the two bolts and remove the wheel hub/upright assembly.

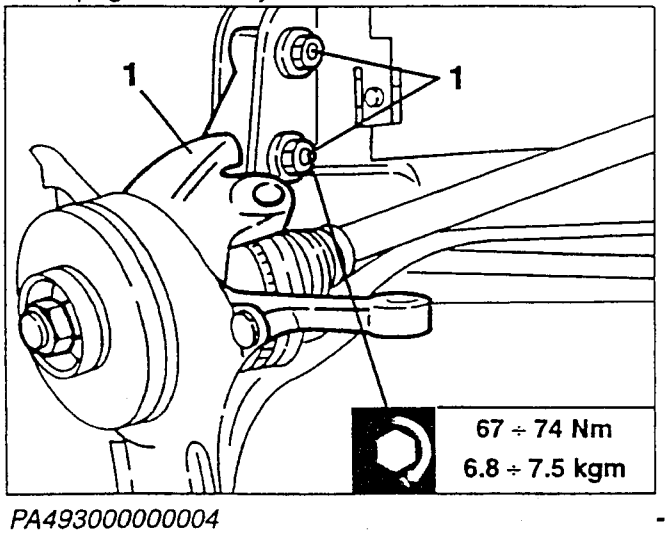

DISASSEMBLY

1. Clamp the wheel upright/hub assembly in a vice fitted with protective jaws and remove the hub retainer ring.

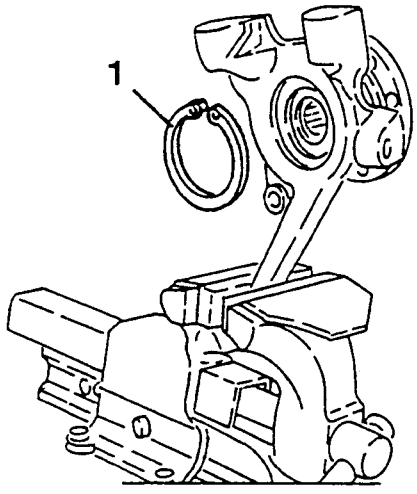

- Remove the brake disk protection.
1. Working at the press and using puller tool no. 1.821.051.000 pull the wheel hub off the upright.

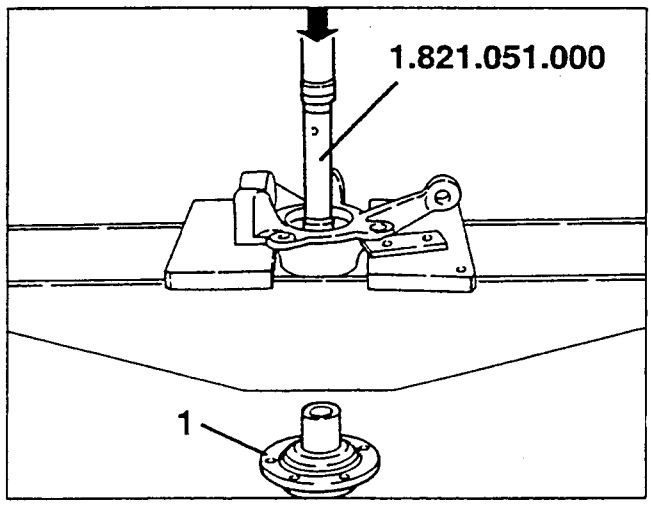

1. Working at the press, using support no. 1.821.149.000 and puller tool no. 1.821.045.000 remove the outer bearing race from the upright.

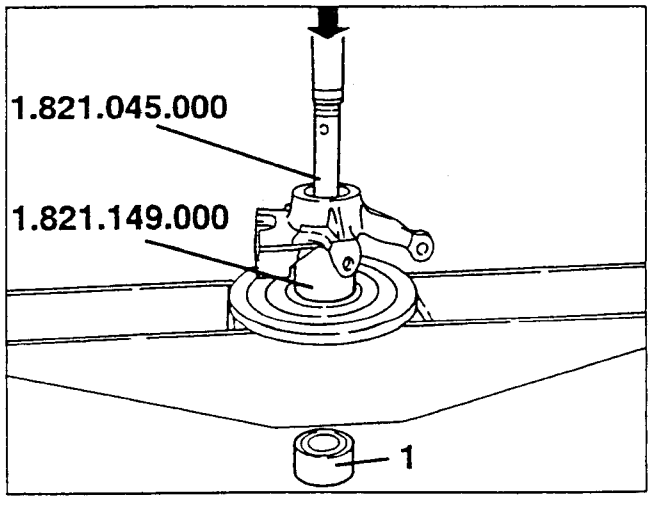

- Using a suitable tool move away the bearing inner race from the contact surface of the wheel hub.
1. Working at the press and using plate no. 1.820.047.002, half rings no. 1.820.223.000 and puller tool no. 1.821.051.000, withdraw the bearing inner race from the wheel hub.

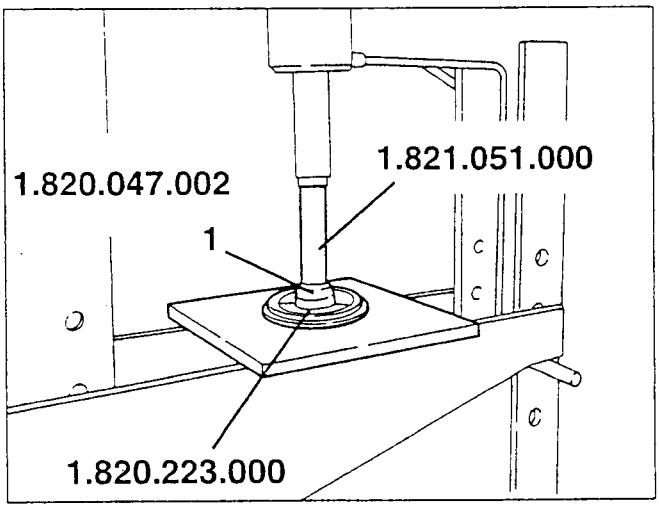

CHECKS AND INSPECTIONS

1. Check the wheel upright inner surface for signs of seizing, and that the arms reveal no signs of damage, bumps, distorsions or traces of breakage, in which case the upright must be replaced.
2. Check the surfaces of the wheel hub for damage or clear signs of bumps or traces of breakage, in which case, the wheel hub must be replaced.
3. Check the conditions of the rolling bearing for cracks, seizure or jamming, if necessary replace the bearing.
4. Always, and in any case, change the constant velocity locking nut before re-assembly.
5. Check the conditions of the ball pin fastening the wheel upright to the wishbone for distorsion, excessive wear, cracks, sticking, or signs of rust and, if necessary, replace the ball pin.

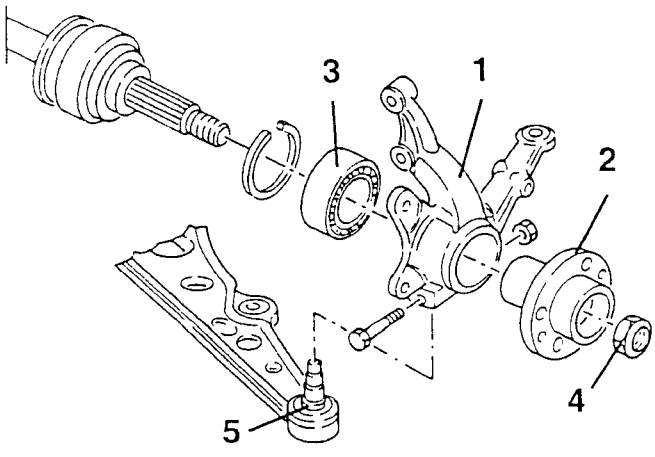

RE-ASSEMBLY

1. Working at the press and using installing tool no. 1.821.209.000 insert the bearing in the wheel upright.

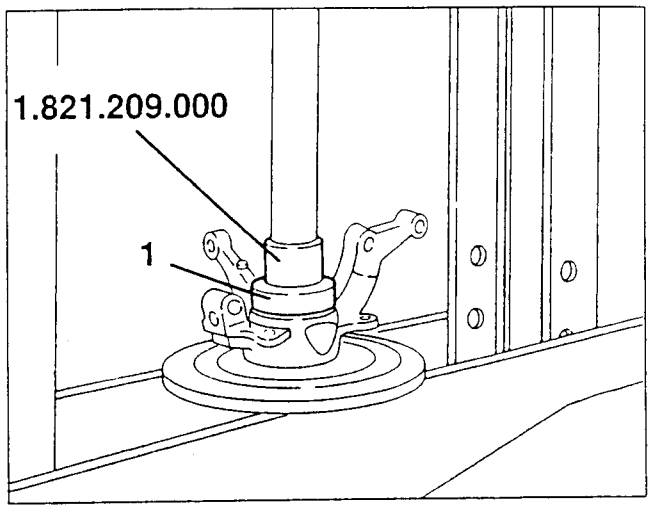

1. Set the brake disk protection (1a) on the wheel hub (1b) then, working under the press using the installing tool no. 1.821.209.000 in the overturned position with respect to the previous step, insert the hub in the wheel upright (1c).

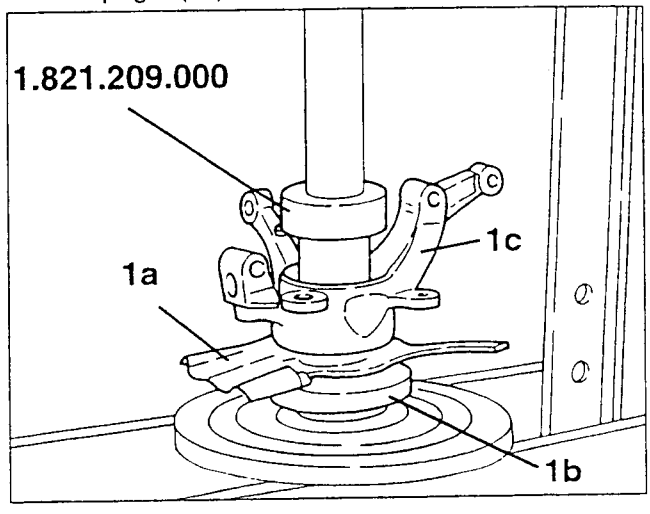

1. Assemble the bearing retainer clip in its housing on the wheel upright.

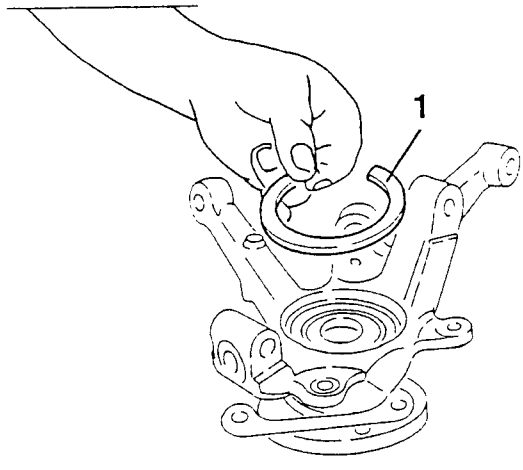

REAR WHEEL HUB

REMOVING/REFITTING

- Set the car on a lift.
- Remove the wheel on the side concerned.
- Remove the brake disk (see GROUP 33).

In the case of cars with rear drum brakes, remove the drums (see GROUP 33) and proceed as described below for cars with rear drum brakes.

1. Remove the dust guard of the rear steering knuckle.
2. Slacken the wheel hub fastening nut as illustrated.

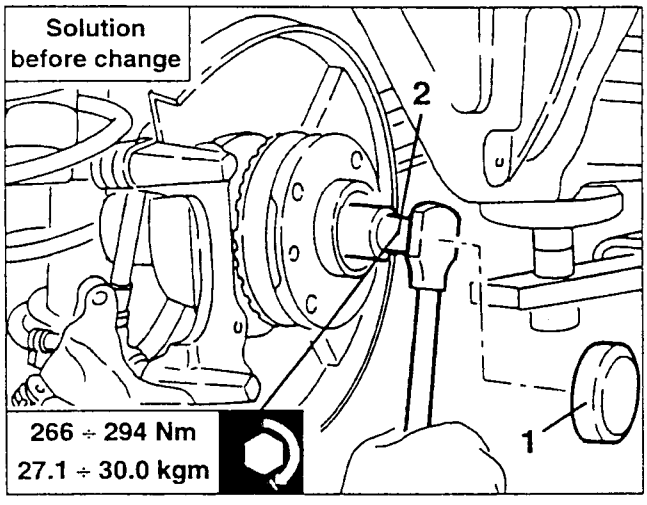

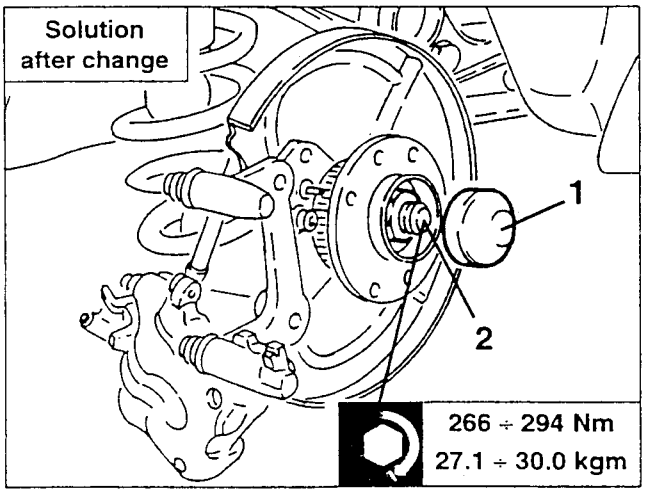

1. Remove the wheel hub.

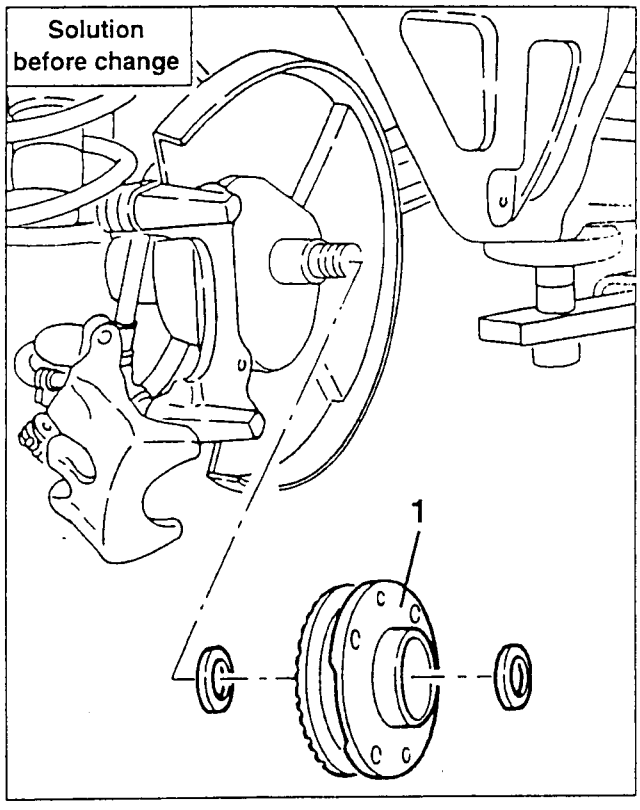

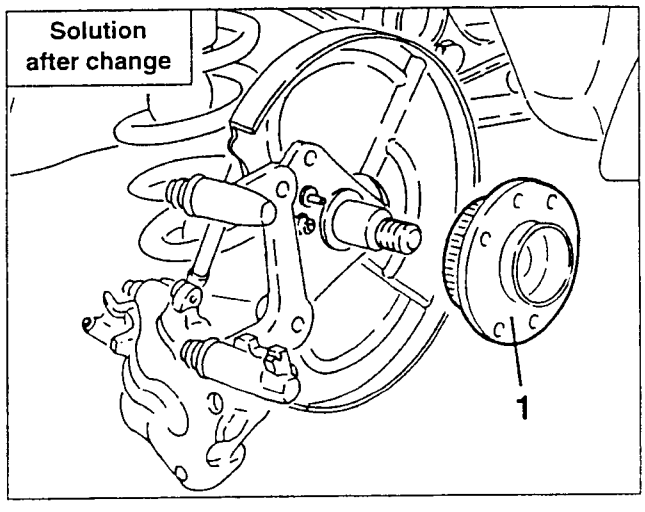

CHECKS AND INSPECTIONS

- Check the conditions of wear of the wheel bearing, keyed inside the hub. In the event of excessive play or noise, it is necessary to replace the hub complete.
- Check the conditions of wears of the spacer and, if necessary, change them.
- Replace the wheel hub fastening nut.

WHEELS

The wheels (tyres and rims) installed are the most suited to the characteristics of the car and guarantee the highest degree of safety and comfort under all normal driving conditions.
Before replacing rims or tyres check the table listing the permitted types.
Never alter the rim-tyre arrangement originally fitted on the vehicle.

RIMS

Steel or alloy rims must be fitted using the specific studs for each type of rim.
Therefore, when steel rims are being replaced by alloy rims or vice-versa, it is absolutely necessary to use the specific studs for the type of wheel installed.

TYRES

The tyres installed on the car are of the tubeless type.
To maintain driving comfort, the highest degree of safety and prolong the life of the tyre, follow the instructions given below:
- Ensure that the wheels are balanced and that the front and rear vehicle trim is correct.
- Never insert tools of any kind between the rim and tyre.
- If the rim gets damaged, replace it.
- For balancing use counterweights specifically for tubeless tyres.
- Tyre pressure (including the spare) must be as specified.
- Inner tubes must not be used on tubeless tyres.

To allow even wear on the front and rear tyres the wheels should be swapped around every 10,000 ÷ 15,000 km keeping them on the same side of the car to avoid switching the direction of rotation.

CAUTION:
Do not swap tyres between sides.

Some types of tyres are fitted with wear indicators and must be replaced as soon as these indicators can be seen on the tread.
Periodically check that the wear on the tread is even.
You are reminded that wear on the tread gradually increases the likelihood of aquaplaning on wet surfaces.
Knocking against pavements, holes in the road and obstacles of various types, lengthy driving on rough roads can cause lesions to the tyres which are not always easy to see.
They may cause deformation, swelling and cuts on the side of the tyre which are often invisible but which could cause sudden deflation or bursting of a tyre.

TYRE PRESSURE AND WEAR

The correct tyre pressure does not only determine the life of the tyre but also affects safety as it influences the degree of road holding of the vehicle.
The pressure in each tyre, including the spare, must be checked at regular intervals and before long journeys. The tyres should be checked when cold; use a pressure gauge in accordance with the specified ratings.
Incorrect pressure results in abnormal wearing of the tyre.
A. Normal pressure
A correct tyre pressure guarantees extended life and better performance as the tread works on its entire width resulting in more uniform wearing.
This situation also involves:
- improved roadholding of the car.
- smoother and more accurate steering.
- lower fuel consumption due to the decreased rolling resistance of the wheel.

B. Insufficient pressure
A low tyre pressure results in uneven wear on the tread (greater on the sides) and overheating of the tyre that can cause the detachment of the parts of the tyre and damage to the casing. This damage may cause sudden deflation or bursting.
C. Overinflation
Conversely, overinflation results in:
- Uneven wear of the tread, higher in the middle.
- Decreased comfort.
- Greater vulnerability to shocks.

WHEEL BALANCING

Each wheel, complete with tyre has been statically and dynamically balanced in the factory. When the tyres are changed the wheels must be rebalanced to avoid unstability, wearing of the steering components and uneven wear of the tyres.

WARNING:
Only original Alfa Romeo counterweights should be used when balancing wheels in light alloy.

CHECKING FRONT WHEEL ALIGNMENT

PRELIMINARY OPERATIONS

- Inflate the tyre to the correct pressure.
- Place the vehicle on a vehicle lift.
- Set the car in the unladen condition (with fuel and fluids).
- Bounce the vehicle a few times to settle the suspension.

For Boxer versions only

1. Position the reference tool on the resting plane of the vehicle.
2. Using a surface gauge measure distance "B" between the resting plane of the vehicle and the centre of the screw securing the ball pin.
- Using a millimeter rule measure the distance.
3. Using a surface gauge measure distance "A" between the resting plane of the vehicle and the lower surface of the chassis 3a and cross member 3b.
- Using a millimeter rule measure the distance.

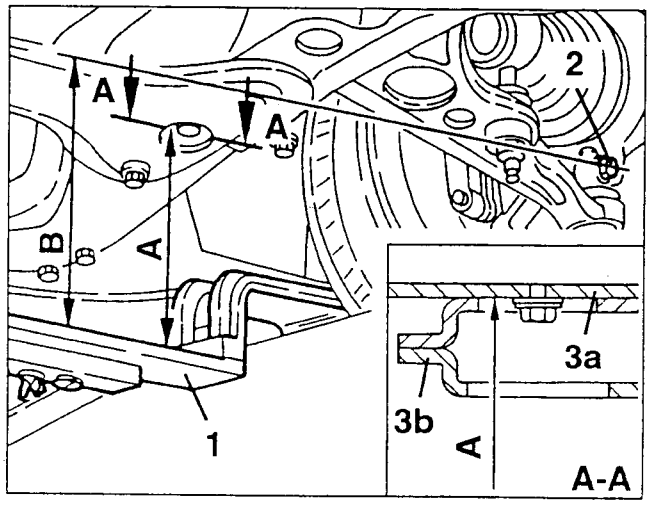

- Calculate the difference between "A" and "B" and check that it is within the specified limits.

Front alignment B - A
40 ± 5 mm

For Turbodiesel and T. Spark 16V versions

1. Position the reference tool on the resting plane of the vehicle.
2. Using a surface gauge measure distance "B" between the resting plane of the vehicle and the centre of the screw securing the ball pin.
- Using a millimeter rule measure the distance.
3. Using a surface gauge measure distance "A" between the resting plane of the vehicle and centre of the pin of the swinging arm.
- Using a millimeter rule measure the distance.

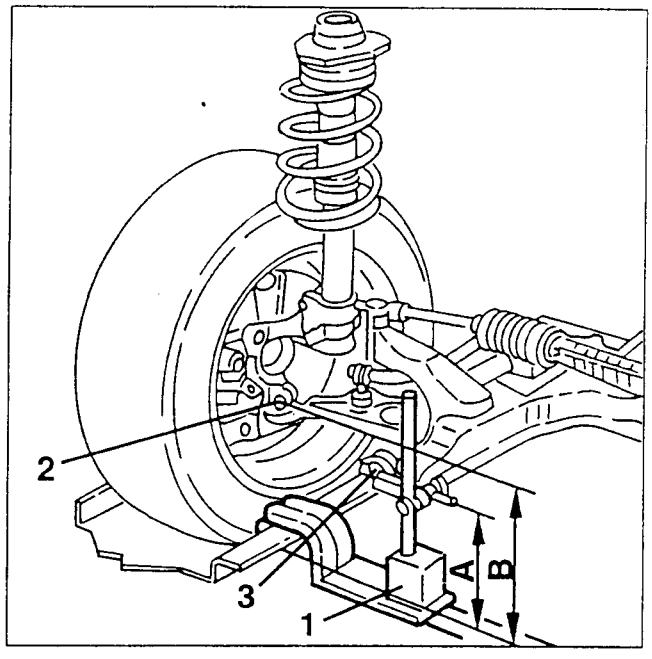

- Calculate the difference between "A" and "B" and check that it is within the specified limits.

Front alignment B - A	
Turbodiesel 1.4 T. Spark 16V 1.6 T. Spark 16V	-13 ± 5 mm
1.8 T. Spark 16V 2.0 T. Spark 16V	-26 ± 5 mm

CHECKING REAR WHEEL ALIGNMENT

PRELIMINARY OPERATIONS

- Inflate the tyres to the correct pressure.
- Place the vehicle on a vehicle lift.
- Set the car in the unladen condition (with fuel and fluids).
- Bounce the vehicle a few times to settle the suspension.

1. Position the reference tool on the resting plane of the vehicle.
2. Using a surface gauge measure the distance "C" between the vehicle's resting plane and the pivot of the rear swinging arm.
- Using a millimeter rule measure the distance.
3. Using a surface gauge measure distance "B" between the resting plane of the vehicle and the centre of the rear wheel.
- Using a millimeter rule measure the distance.

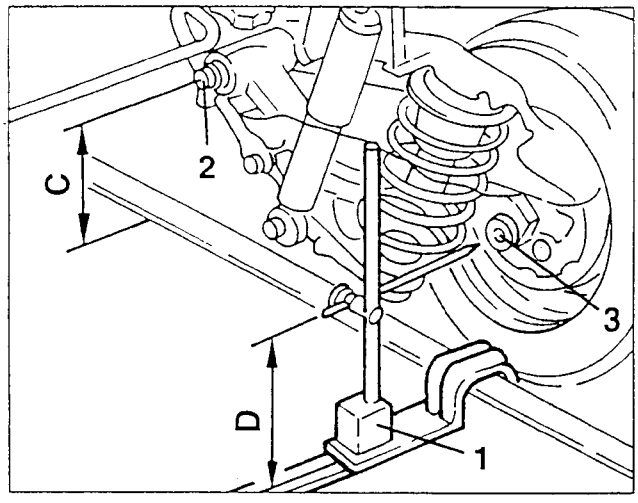

- Calculate the difference between "C" and "D" and check that it is within the specified limits.

Rear alignment C - D
7 ± 5 mm (*) -2 ± 5 mm

(*): Specific for Boxer versions.

NOTE: If the alignment values are not within the specified limits replace both suspension springs.

CHECKING CHARACTERISTIC ANGLES

PRELIMINARY OPERATIONS

- Inflate the tyres to the correct pressure.
- Check that the eccentricity and orthogonality of the wheel rims do not exceed:
• 1 mm for steel rims
• 0.3 mm for alloy rims

CHECKING FRONT WHEEL TOE-IN AND TOE-OUT

- Using a suitable tool check that the toe-in and toe-out values are within the specified limits.

Front wheel toe-in/toe-out A - B (*)	
Boxer	3.5 ± 1 mm
Turbodiesel 1.4 T. Spark 16V 1.6 T. Spark 16V	-1 ± 1 mm
1.8 T. Spark 16V 2.0 T. Spark 16V	0 ± 1 mm

(*): Values measured unladen in running order (with specified fluids)

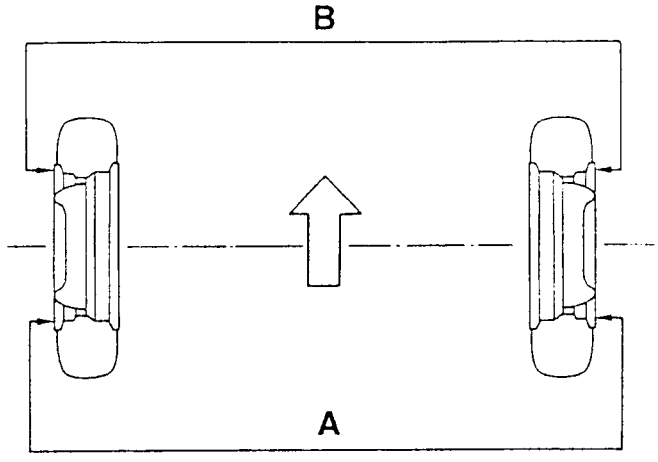

If the toe-in values differ from those specified, proceed as follows:
1. Loosen the attachments for the adjustment of the steering rods.

WARNING:Each time the front wheel toe-in is checked the bellows should also be checked to ensure that they rotate freely on the rod. If necessary pull them off and lubricate them with the specified grease.

2. Rotate the rods until the specified value is reached without altering the position of the steering wheel.
NOTE: This adjustment must be carried out by operating on the rods of both wheels.
- Tighten the steering rod adjustment attachments to the specified torque.

Specific for Boxer versions

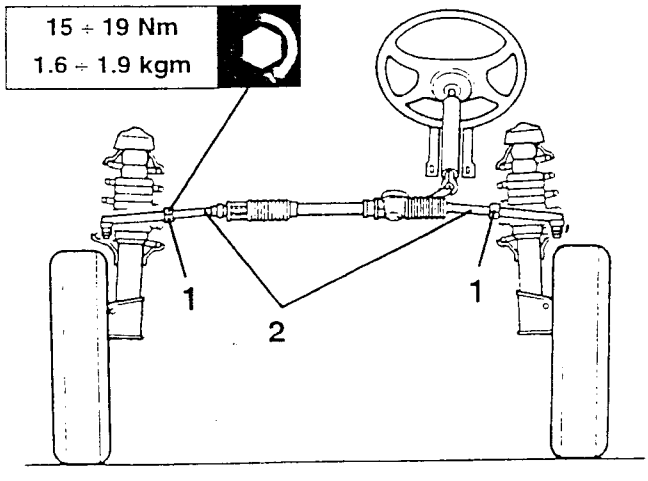

Specific for Turbodiesel and T. Spark 16V versions

28.9 ÷ 35.7 Nm
2.95 ÷ 3.64 kgm

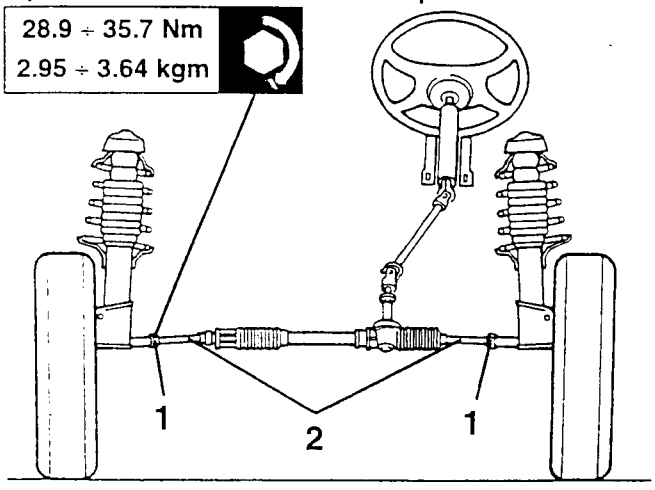

CHECKING FRONT WHEEL CAMBER AND CASTER

- Check that the camber and caster angles (not adjustable) are within the specified limits.

Front wheel camber "α" (*)	
Boxer	0°10' ± 20'
Turbodiesel 1.4 T. Spark 16V 1.6 T. Spark 16V	-1°10' ± 20'
1.8 T. Spark 16V 2.0 T. Spark 16V	-1°30' ± 20'

(*): Values measured unladen in running order (with specified fluids)

Caster angle "β" (*)
3°20' ± 30'

(*): Values measured unladen in running order (with specified fluids)

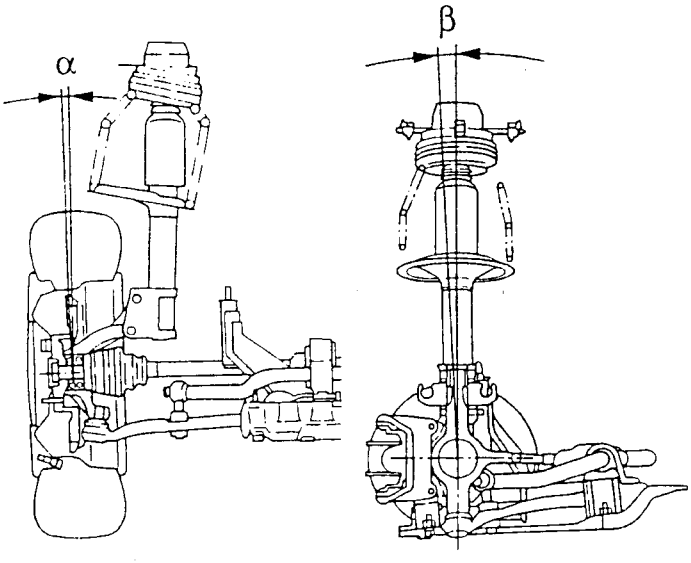

NOTE: If the values measured differ from the specified values body squaring should be checked (see GROUP 70).

CHECKING REAR WHEEL TOE-IN

- Using a suitable tools check that the toe-in value (not adjustable) is within the specified limits.

Rear wheel toe-in A - B (*)	
Boxer	4 ± 2 mm
Turbodiesel 1.4 T. Spark 16V 1.6 T. Spark 16V	1 ± 1 mm
1.8 T. Spark 16V 2.0 T. Spark 16V	1.5 ± 1 mm

(*): Values measured unladen in running order (with specified fluids)

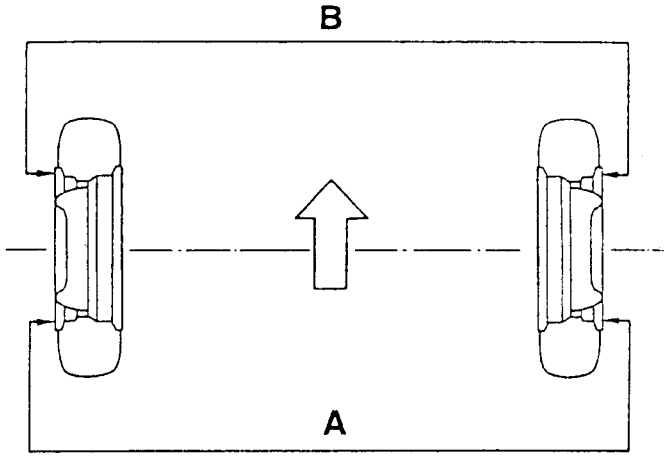

CHECKING REAR WHEEL CAMBER

- Check that the camber angle (not adjustable) is within the specified limits.

Rear wheel camber "α" (*)
-1° ± 15' (▲) -45' ± 15'

(*): Values measured unladen in running order (with specified fluids)
(▲): Specific for Boxer versions

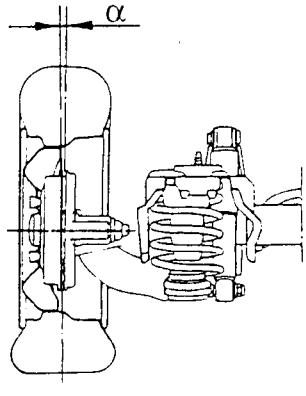

SERVICE

DIREZIONE POST-VENDITA
SERVIZI ASSISTENZIALI
Viale Alfa Romeo 20020 Arese (MI)
Fiat Auto S.p.A.

Publication PA493000000000 - 3/94
Printed in Italy
no. 60494360

All rights reserved.
Reproduction, even partial, without the express permission in writing from Fiat Auto S.p.A.

Printed in Italy by Tip. Bogliani - Torino