INDEX

STEERING COMMAND AND LINKAGE 1351 1596 1712 16V

- Description 1
- Steering wheel (with Air Bag) . . . . . (*)
- Steering wheel (without Air Bag) 1
- Steering linkages 2
- Steering column 3
- Ignition block 3

POWER STEERING 1351 1596 1712 16V

- Power steering box 4
- Power steering pump 6
- Refilling the power steering circuit and bleeding the air 6

STEERING COMMAND AND LINKAGE 1929 TD 1970 T. SPARK 16V

- Description 7
- Steering wheel (with Air Bag) . . . . . (*)
- Steering wheel (without Air Bag) . . . . . (**)
- Ignition block . . . . . (**)
- Steering column 7

POWER STEERING 1929 TD 1970 T. SPARK 16V

- Power steering box 8
- Power steering pump 10
- Refilling the power steering circuit and bleeding the air 11
- Power steering guards 11

STEERING COOMAND AND LINKAGE 1370 1598 1747 T. SPARK 16V

- Description . . . . . (□)
- Steering wheel (with Air Bag) . . . . . (*)
- Steering wheel (without Air Bag) . . . . . (**)
- Ignition block . . . . . (**)
- Steering column . . . . . (□)

POWER STEERING 1370 1598 1747 T. SPARK 16V

- Power steering box . . . . . (□)
- Power steering pump . . . . . (□)
- Refilling the power steering circuit and bleeding the air . . . . . (□)

STEERING COMMAND AND LINKAGE - '98 Models 1747 T. SPARK 16V 1970 T. SPARK 16V

- Description 12
- Steering wheel (with Air Bag) . . . . . (*)
- Steering wheel (without Air Bag) . . . . . (**)
- Ignition block . . . . . (**)
- Steering column . . . . . (□)

POWER STEERING - '98 Models 1747 T. SPARK 16V 1970 T. SPARK 16V

- Power steering box . . . . . (□)
- Power steering reservoir 13
- Power steering pump 14
- Refilling the power steering circuit and bleeding the air . . . . . (□)
- Power steering guards . . . . . (□)

(*): See GROUP 70 - Interior trim "Air Bag"

(**): See 1351 1596 1712 16V

(□): See 1970 T. SPARK 16V

DESCRIPTION

The power steering system enables the effort required to turn the steering wheel to be reduced when manoeuvring from a standstill and it keeps the steering steady at high speeds. The composition of the steering column (5), articulated in two parts ensures greater passive safety in the event of a frontal impact. The system comprises a pump (1) operated directly by the engine through a belt.

The pump withdraws oil through the delivery line from the reservoir (2) located in the engine compartment and sends it under pressure through a hose to the distribution valve located on the power steering box (3). The distributing valve connected by a hose to the reservoir allows the outgoing oil to return to the reservoir. Inside this hose there is a coil (6) which cools the oil.

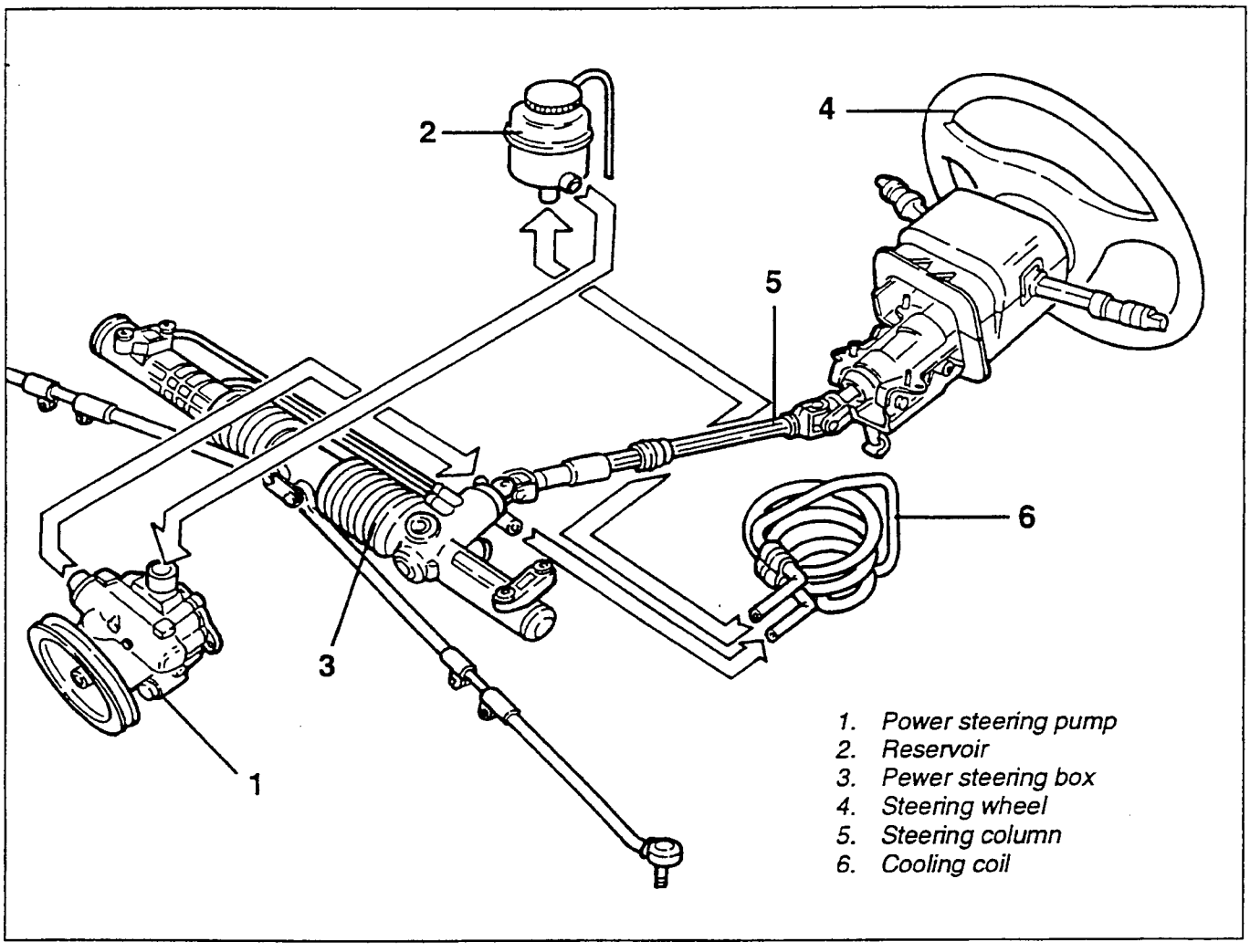

STEERING WHEEL (WITH AIR BAG)

For removing/refitting refer to GROUP 70 - INTERIOR TRIM "AIR BAG".

STEERING WHEEL (WITHOUT AIR BAG)

REMOVAL/REFITTING

- Disconnect the battery (-) terminal.

1. Prise up the horn control and remove it after disconnecting the electrical connection.
2. Slacken the fastening nut and remove the steering wheel.

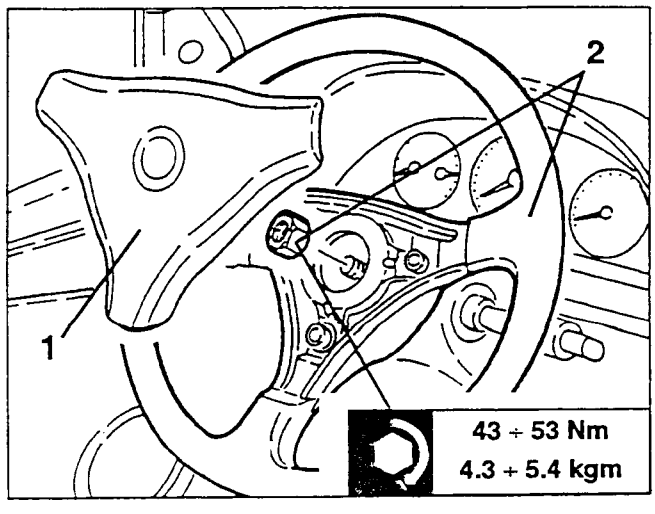

STEERING LINKAGES

REMOVAL/REFITTING

- Remove the air intake box (see GROUP 10).
1. Slacken the screw and nut fastening the ignition coil support bracket, then move it to one side.
2. Remove the plastic button and retrieve the two safety catches.

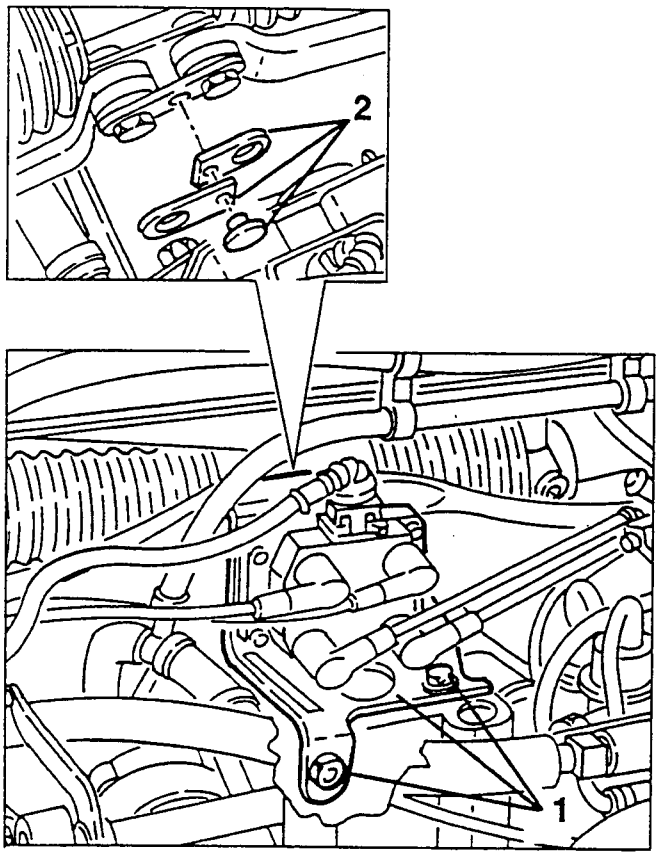

1. Slacken the fastening screw and disconnect the track rod concerned from the power steering box.

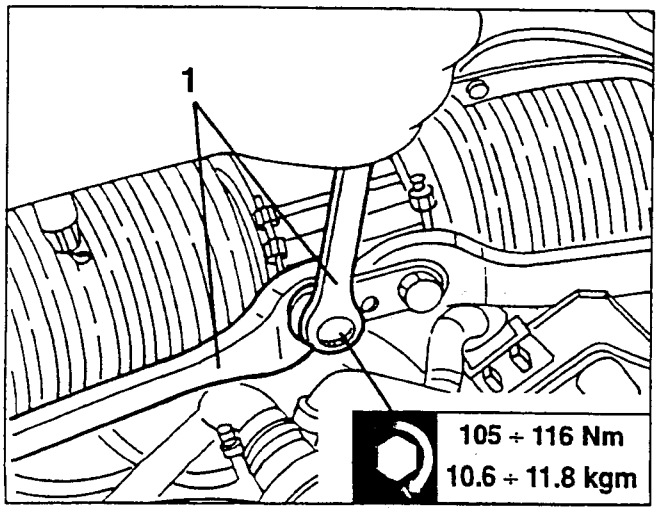

- Remove the wheel on the side concerned.
1. Slacken the nut fastening the track rod from the connection on the shock absorber.

2. Using tool N° 1.821.169.000 (A.3.0633), disconnect the steering knuckle from the connection on the shock absorber.

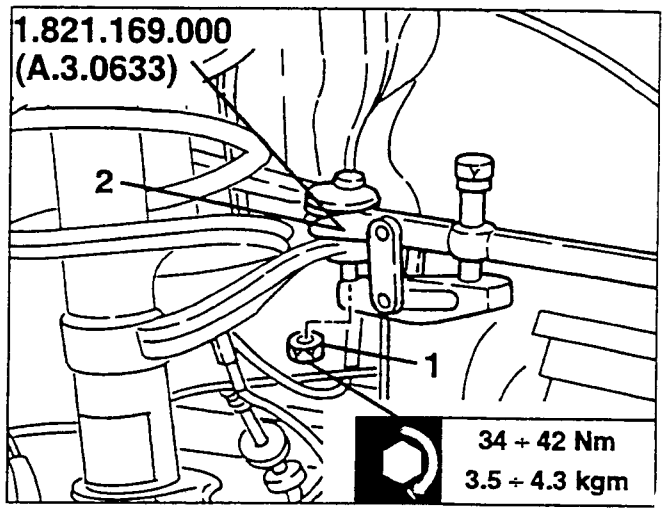

1. Working from the wheel house, remove the complete track rod.

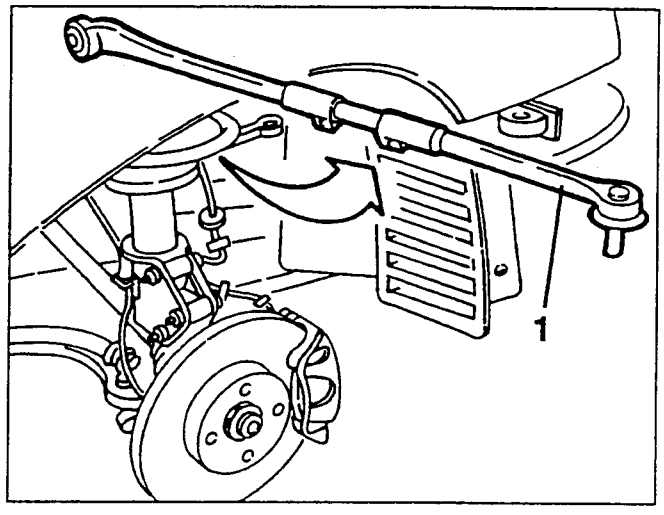

When refitting, adjust the track rods as described below.

1. Slacken the two fastening screws and work on the adjustment coupling until the specified toe-in has been obtained (see GROUP 44).

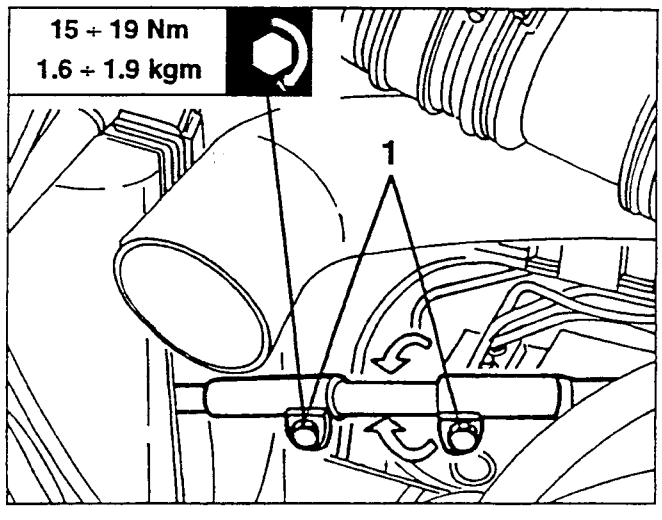

STEERING COLUMN

REMOVAL/REFITTING

- Remove the steering wheel (see specific paragraph).
- Remove the steering column control lever unit (see GROUP 55).
- Remove the fusebox cover (see GROUP 70).

1. Slacken the four screws fastening the upper steering column to the body.
2. Slacken the screw fastening the upper steering column to the lower steering column, then remove the upper steering column.

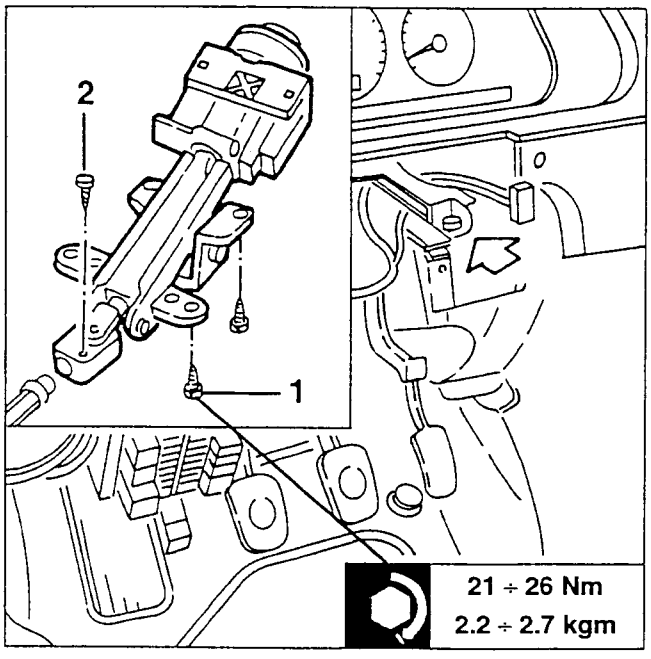

1. Slacken the screw fastening the lower steering column to the power steering box pinion.

To gain access to the screw, proceed as described in "Power steering box - Removal/Refitting" without disconnecting the track rods.

2. Still working from the engine compartment, remove the lower steering column.

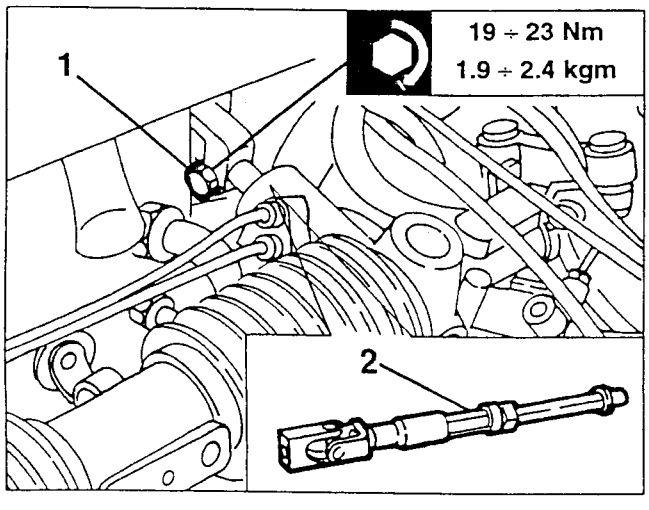

1. On the bench, if necessary, using a suitable punch, slacken the two fastening pins and separate the control unit and ignition block support from the upper steering column.

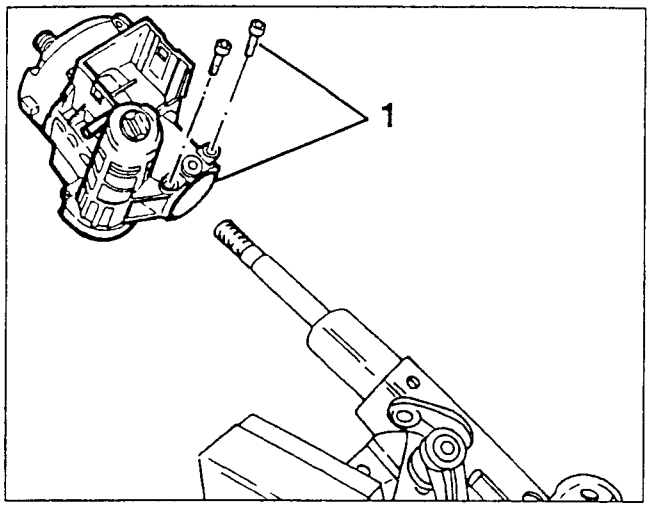

When refitting, using a pin (1) as illustrated, correctly position the control unit and ignition block support, then fasten it with the special screws (2) with preset breakage load.

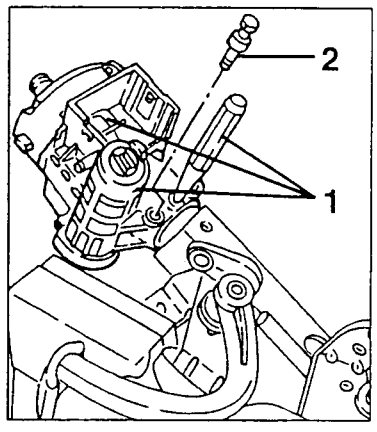

IGNITION BLOCK

REMOVAL/REFITTING

- Remove the steering column half cover (see GROUP 70).

1. Take the ignition block to the "MAR" position and working on the fastener catch with a punch withdraw it pulling upwards.

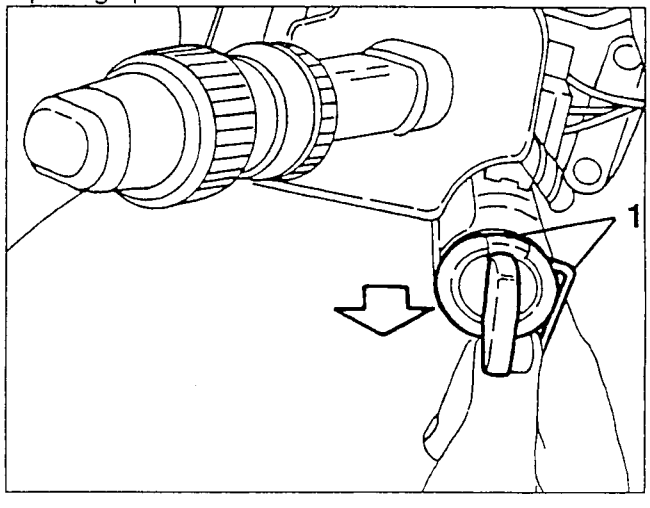

POWER STEERING BOX

REMOVAL/REFITTING

- Empty the oil from the power steering reservoir, using a suitable syringe.
- Remove the battery and the acid drain tray (see GROUP 55).
- Remove the air cleaner unit and intake box complete (see GROUP 10).

1. Disconnect the earth from the engine bulkhead.
2. Slacken the screw and remove the electrical connection support bracket.

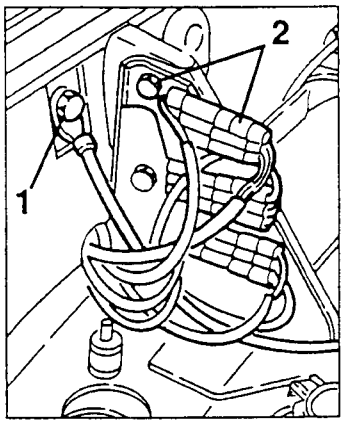

1. Slacken the two fastening nuts and move the power steering reservoir to one side without disconnecting the hoses.

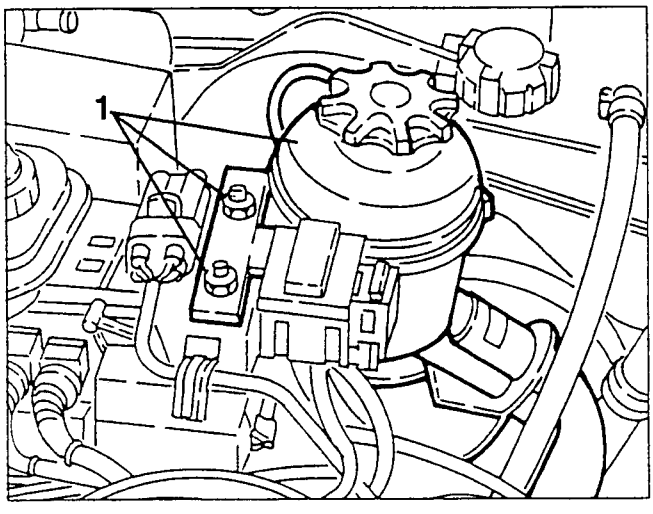

1. Remove the relay switches from the support bracket then move the bracket upwards after unscrewing the fastening screws.

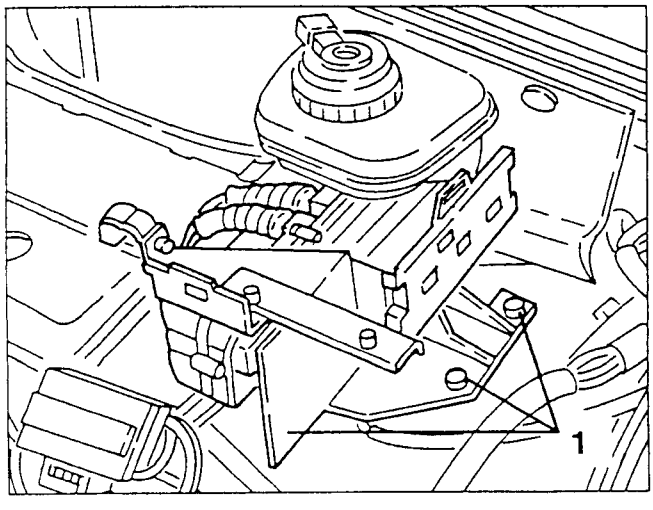

1. Slacken the fastening screw and bolt and remove the power steering hose support bracket.

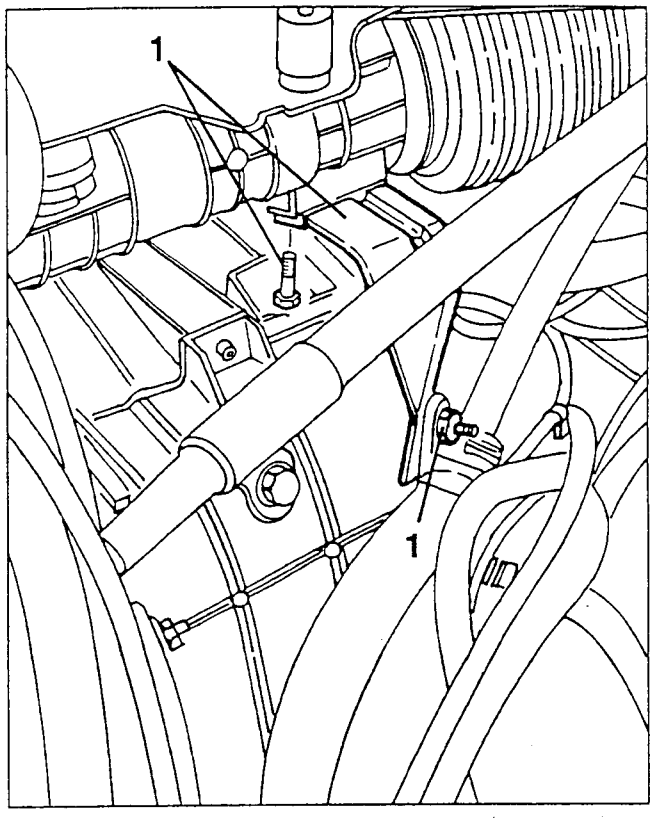

1. Slacken the four screws fastening the power steering box to the crossmember.
2. Slacken the five fastening screws and remove the crossmember supporting the battery and the power steering box.

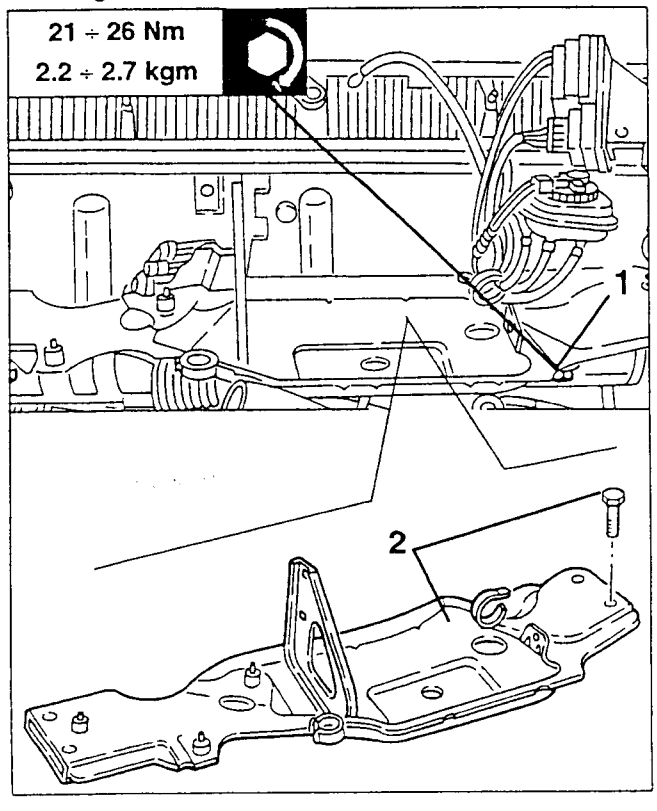

1. Slacken the screw and nut fastening the ignition coil support bracket then move it to one side.
2. Remove the plastic button and retrieve the two safety catches.

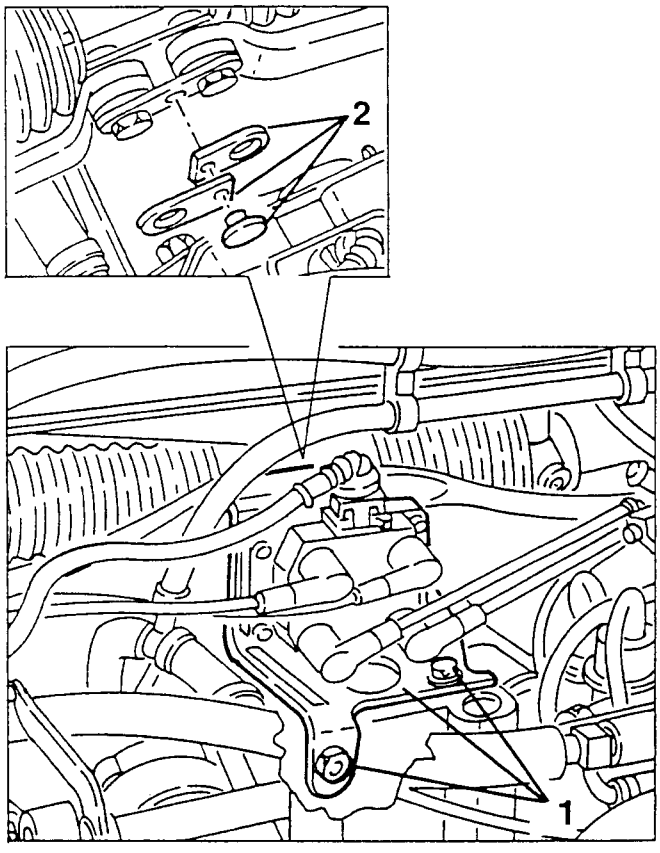

1. Slacken the screws fastening the power steering to the track rods.
2. Retrieve the plate.

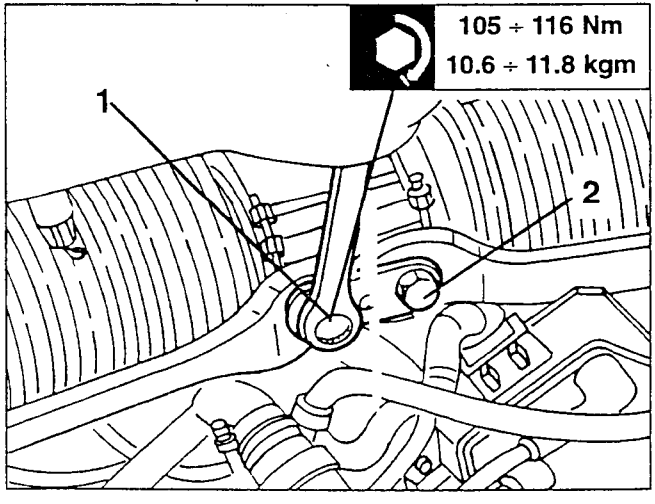

1. Slacken the screw fastening the steering column to the pinion of the power steering box, then move aside the latter.

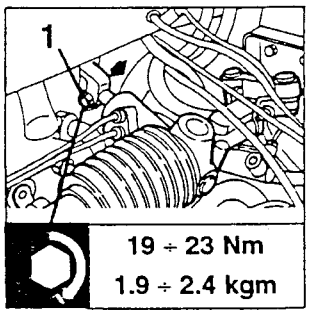

1. Disconnect the two oil inlet and outlet hoses from the power steering box.

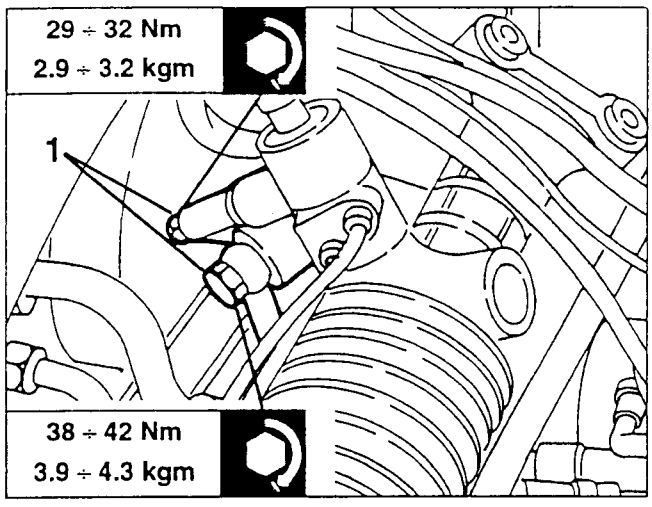

1. Remove the power steering box.

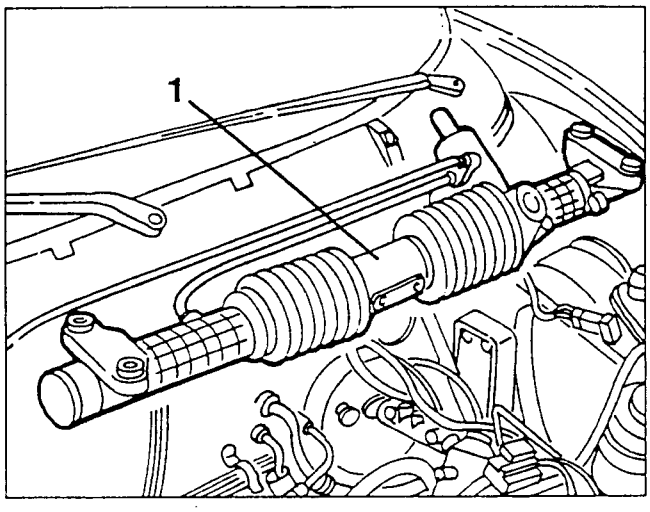

1. On the bench, if necessary, remove the circlip and withdraw the positioning plate from the power steering box pinion.

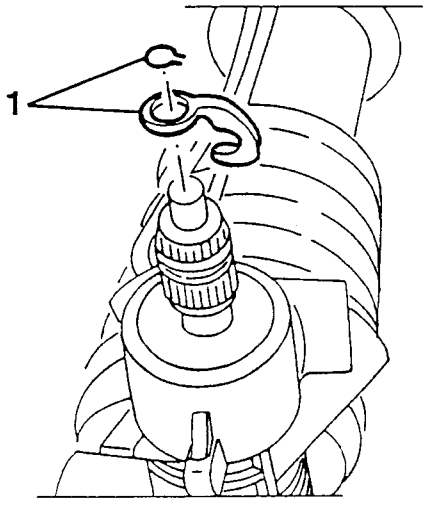

POWER STEERING PUMP

REMOVAL/REFITTING

- Empty the oil from the power steering reservoir, using a suitable syringe.
1. Disconnect the oil inlet and outlet hoses from the power steering pump.
2. Slacken the two bolts fastening the power steering pump and remove it from the drive belt.
3. Slacken completely the two fastening bolts and remove the power steering pump.

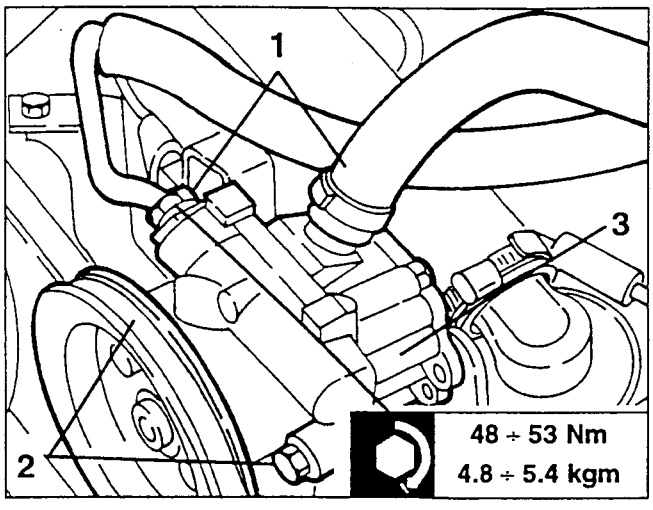

CHECKS AND INSPECTIONS

WARNING:
The power steering pump, like the steering box, should not be dis-assembled for any reason whatsoever and must be sent to the Manufacturer for overhauling.

- Check the rolling torque of the steering wheel with the car stationary and the engine running. The torque must be between 0.6 daN with the engine at idle speed and 0.75 daN with the engine at maximum: if these limits are exceede check the pressure in the system with the wheels completely turned. Insert a pressure guage using a suitable Tee connection on the pressurised oil delivery hose leading from the pump to the power steering and turn the steering wheel fully in one direction. Further forcing the steering wheel, the pressure indicated on the pressure gauge should rise to appr. 85 bar. If this fails to happen, there is either a failure in the pump or in the distributing valve of the power steering box.

REFILLING THE POWER STEERING CIRCUIT AND BLEEDING THE AIR

1. Disconnect the reservoir breather pipe.
2. Remove the cap and fill the reservoir with the specified oil.

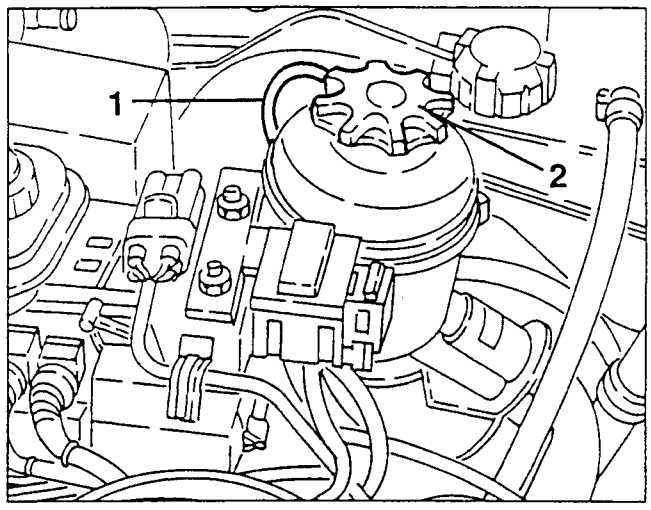

1. Disconnect the inlet hose on the power steering pump until oil flows out, then re-connect it.

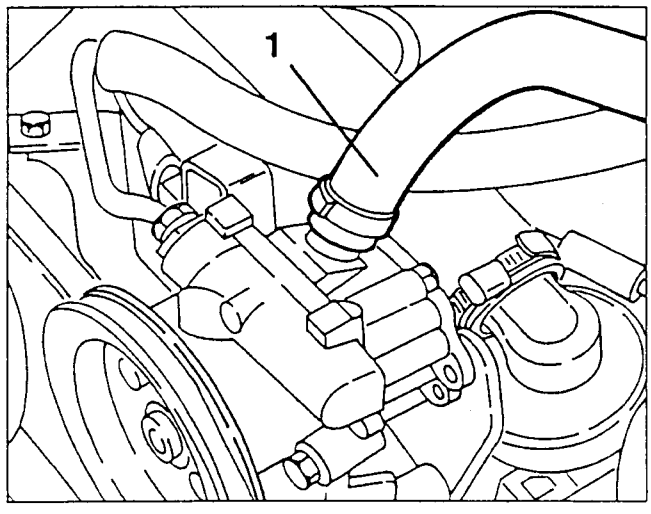

- With the engine running at idle speed, ensure that the reservoir does not empty. Turn the steering wheel completely a few times to bleed the air from the system. Then top up the reservoir to the maximum level mark.

WARNING:
The power steering system is self-purging; the air is removed steering completely to the right and to the left with the engine running and the car stationary. This operation should be carried out each time the connection hoses are removed and refitted.

- Completely insert the breather pipe and refit the reservoir cover.

Stiffening of the steering might be due to slipping of the pump drive belt or to low oil level. In the event of a failure to the pump, operating cylinder or distributing valve, the power steering system will work like a normal mechanical gearbox.

DESCRIPTION

The power-assisted steering system enables the effort at the steering wheel to be reduced when manoeuvring from a standstill and keeps steering steady at high speeds. The conformation of the steering column (5) articulated in two sections, confers greater passive safety in the event of frontal impact.

The system comprises a pump (1) operated directly by the engine through a belt. The pump withdraws oil through the delivery hose from the reservoir (2) located in the engine compartment, and sends it under pressure through a hose to the distributing valve located in the power steering box (3). The distributing valve connected through a hose to the reservoir allows the oil from the operating cylinder to return to the reservoir.

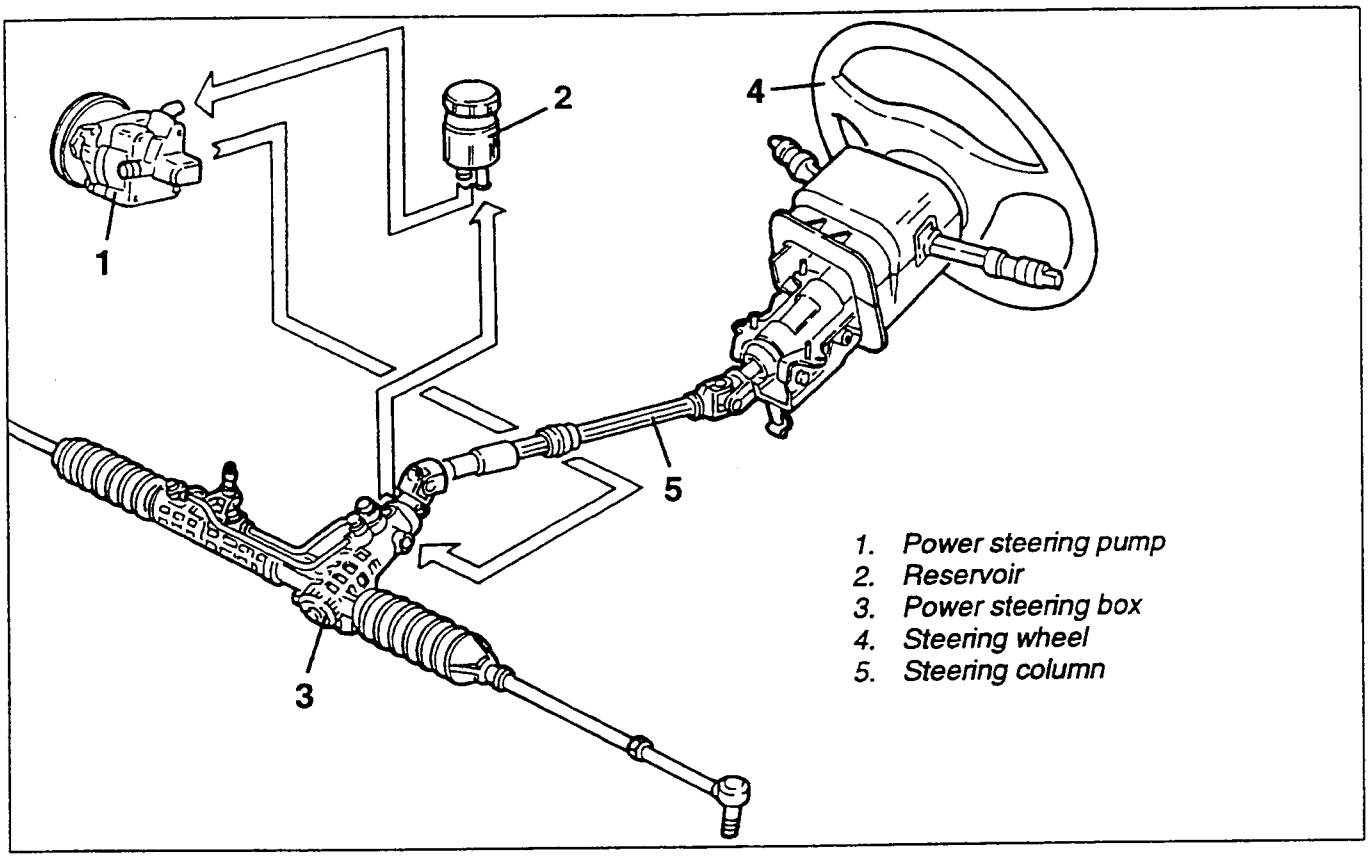

STEERING WHEEL (WITH AIR BAG)

For removing/refitting refer to GROUP 70 - INTERIOR TRIM "AIR BAG".

STEERING WHEEL (WITHOUT AIR BAG)

For removing/refitting refer to Boxer engines.

IGNITION BLOCK

For removing/refitting refer to Boxer engines.

STEERING COLUMN

REMOVAL/REFITTING

See the Boxer engines, with the exception of the remotion of the steering column (1) from the power steering box pinion as the steering column is removed completely (upper and lower section).

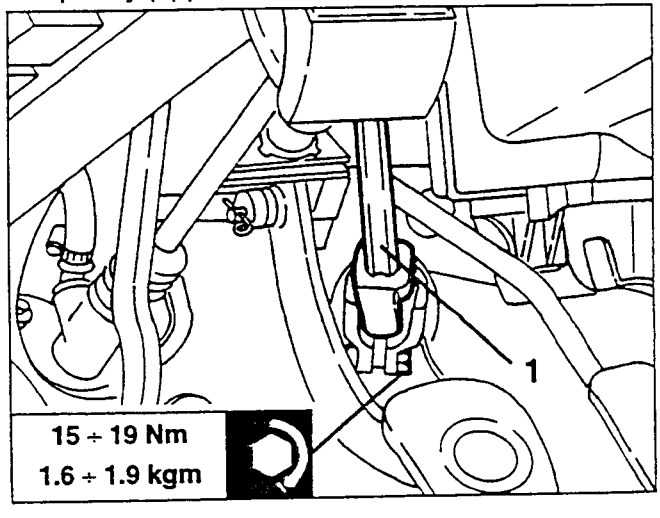

POWER STEERING BOX

DESCRIPTION

The power steering box assembly is similar to a conventional rack and pinion steering system with the exception of the following:
- an operating cylinder (2) has been made in the steering box in which a double-acting piston (1) runs that is integral with the rack rod;
- a distributing valve (3) with the corresponding ducts is located in the housing of the worm screw. This is controlled by a torsion device (4) in the end of the worm screw.

Depending on the torsion transmitted by the steering wheel to the device, the oil from the pump is sent to the reservoir, or to one of the two chambers A or B of the operating cylinder. The force generated by the pressure of the oil on the side surface of the piston determines its movement, thus also of the rack.

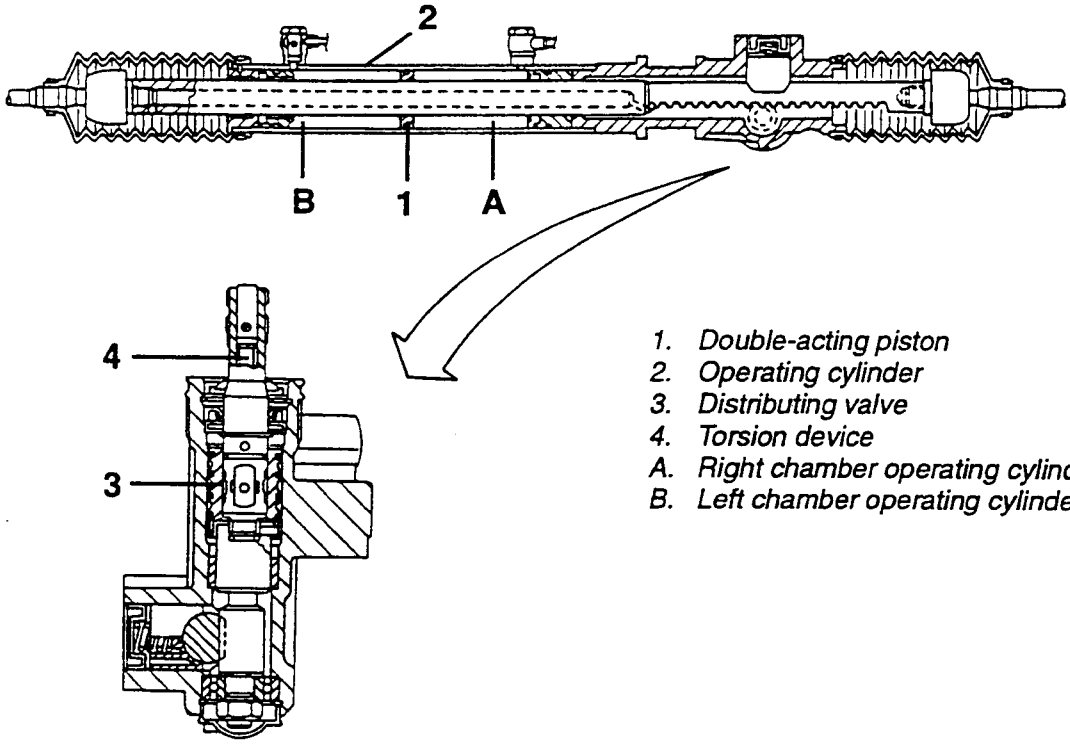

1. *Double-acting piston*
2. *Operating cylinder*
3. *Distributing valve*
4. *Torsion device*

A. *Right chamber operating cylinder*
B. *Left chamber operating cylinder*

REMOVAL/REFITTING

- Set the car on a lift.
- Using a suitable syringe, empty the power steering system reservoir.
- Remove the front wheels.

1. Working from inside the car, slacken the bolt fastening the steering column to the power steering box pinion.

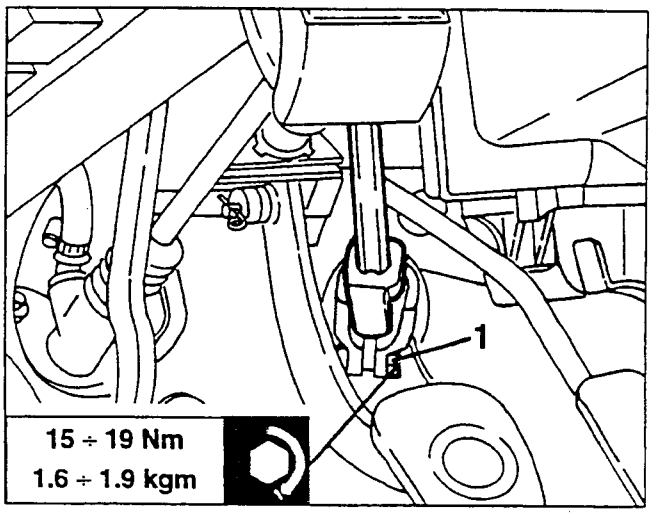

- Raise the car.

1. Slacken the nuts fastening the track rod ball joints to the wheel hubs.
2. Using tool N° 1.821.169.000 (A.3.0633), disconnect the ball joints from the hubs.

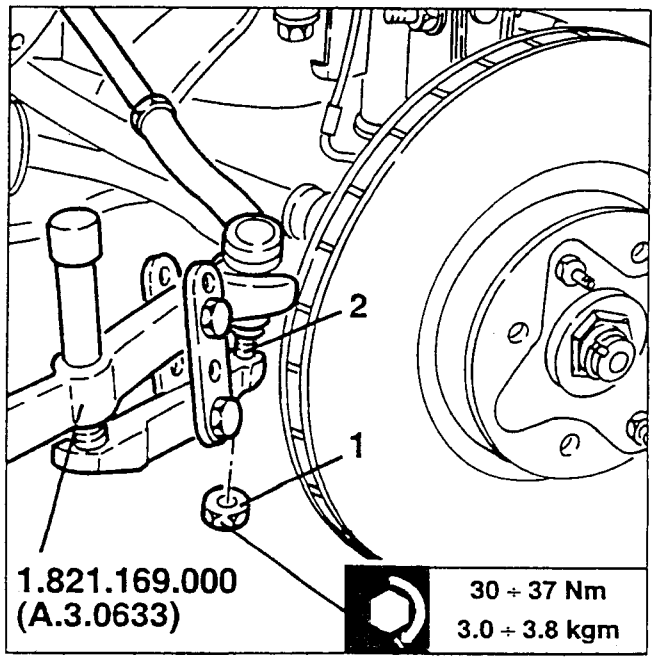

- Raise the car.
1. From the power steering box disconnect the couplings of the oil inlet and outlet hoses.

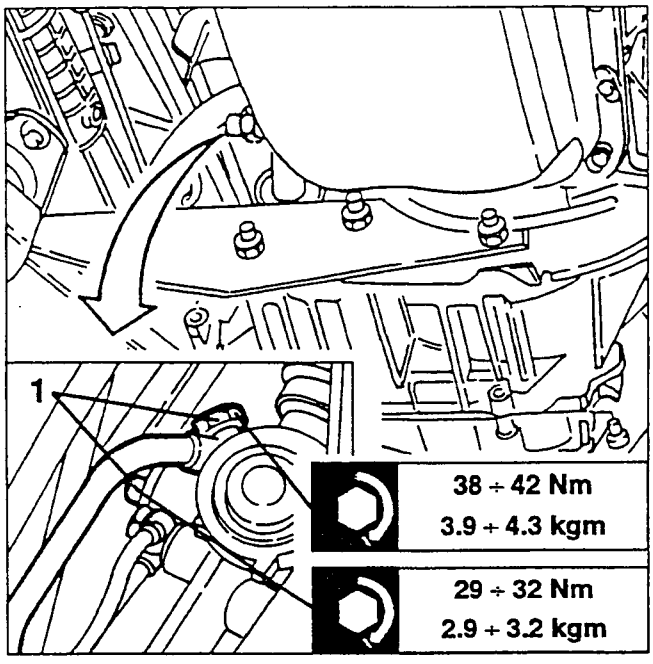

1. Disconnect the speed engagement rods from the support.

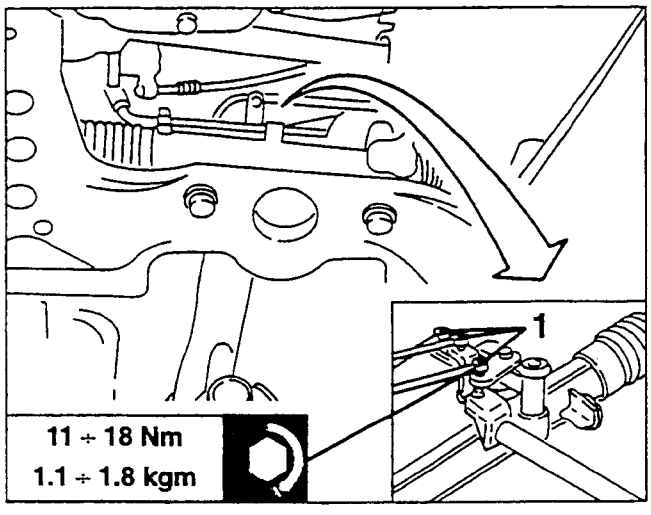

- Remove the front crossmember (see GROUP 44) and remove the power steering box.

When refitting, if necessary, adjust the track rods as described below.

1. Slacken the two fastening nuts and tighten or slacken the track rods until the specified toe-in is obtained (see GROUP 44).

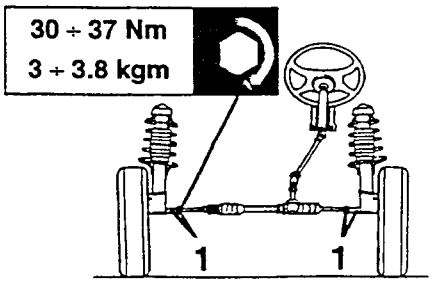

DIS-ASSEMBLY/REASSEMBLY

1. Slacken the locknut of the track rods.
2. Slacken the track rods and remove them from the arm.
3. Slacken the clamps and remove the bellows.

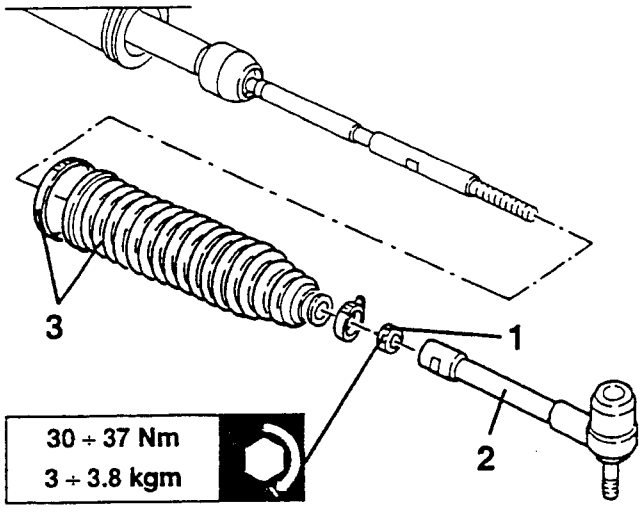

When refitting lubricate the contact area between the bellows and the shaft with silicone grease. When the clamp is installed and closed to the second or third from last tooth this will enable the arm to turn freely inside the bellows.

CHECKS AND INSPECTIONS

1. Check that the ball joints are not damaged or worn and that they can turn freely in their housings without sticking or excessive play.
2. Check that the track rods are not damaged or distorted.
3. Make sure that the bellows are intact.

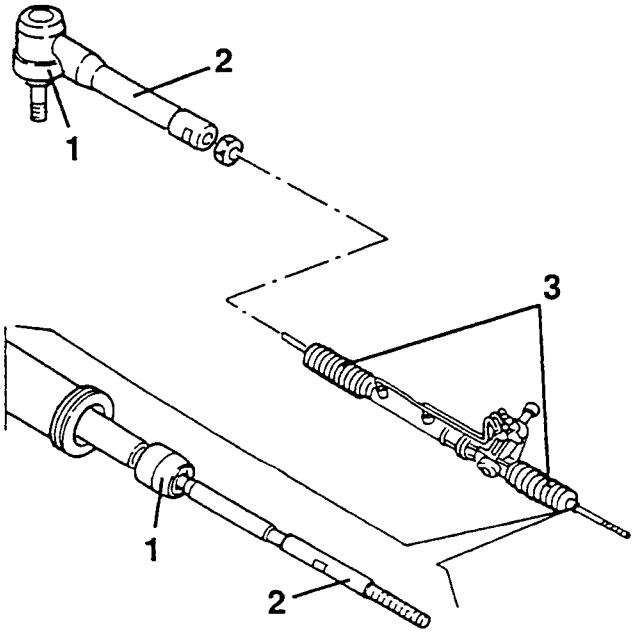

POWER STEERING PUMP

REMOVAL/REFITTING
Specific for Turbodiesel engine

- Empty the oil from the power steering system, using a suitable syringe.
1. From the power steering pump disconnect the oil inlet and outlet hoses.
2. Slacken the two screws and remove the power steering pump drive belt guard.
3. Slacken the screws fastening the power steering pump and working on the micrometric tensioner, slacken the belt tension and remove it.
- Remove the screws slackened previously and remove the power steering pump.

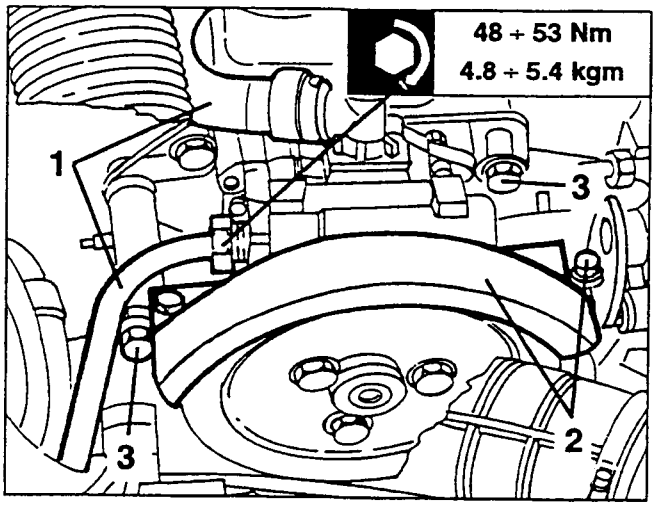

REMOVING/REFITTING
Specific for T.Spark 16V engine

- Set the car on a lift.
- Remove the right front wheel and mud flap.
- Empty the power steering tank oil using a suitable syringe.
1. Raise the car and proceeding as illustrated on the belt tensioner, slacken the tension of the auxiliary components drive belt and remove it.

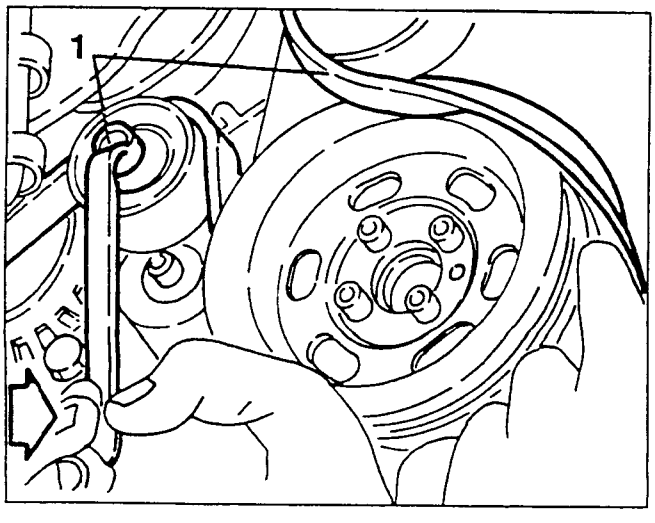

1. Slacken the screw fastening the belt tensioner.

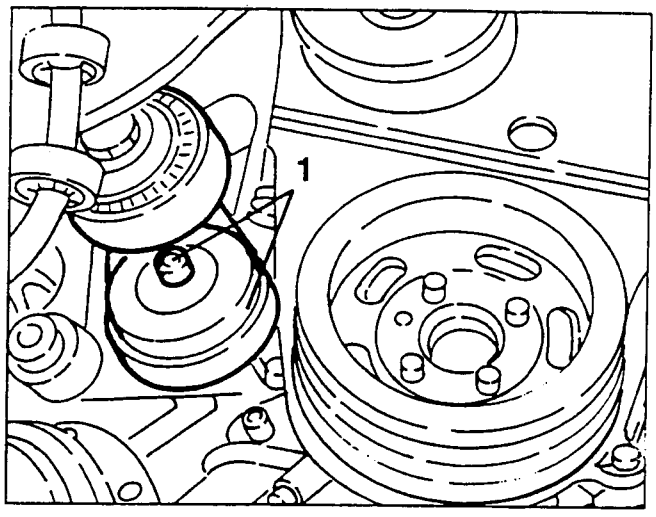

1. Holding the pump shaft still, slacken the three screws fastening the power steering pump pulley and remove the latter.
2. Working from above, disconnect the two intake and delivery pipes from the power steering pump.

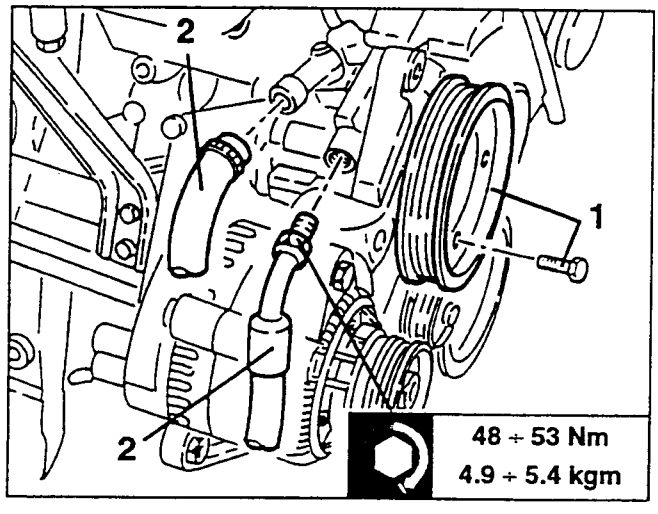

1. Slacken the three fastening screws and remove the power steering pump.

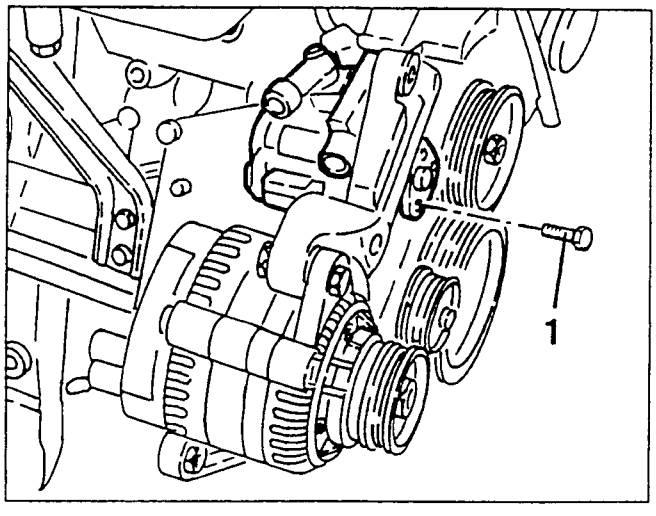

TESTS AND CHECKS

IMPORTANT:
Never disassemble the power steering pump or the power steering unit. These units can only be overhauled by the manufacturer.

Check the rolling torque with the vehicle stationary and the engine running.
The torque should be included between 0.6 daN when the engine is idling and 0.75 daN when the engine is running at maximum rating.
If these values are exceeded, check system pressure with the wheels completely steered.
For this test, connect a pressure gauge with a suitable T fitting on the pressurised oil pipe leading from the pump to the power steering unit and steering completely to one side.
When the steering wheel is forced, the pressure shown should increase to approximately 85 bar. If this does not happen, either the pump or the power steering distribution valves are faulty.

TOPPING-UP THE POWER STEERING CIRCUIT AND BLEEDING THE AIR

- Remove the filler cap and top up the reservoir with the prescribed type of oil.
1. Loosen the intake pipe clip on the power steering pump and bleed the circuit until oil flows out.

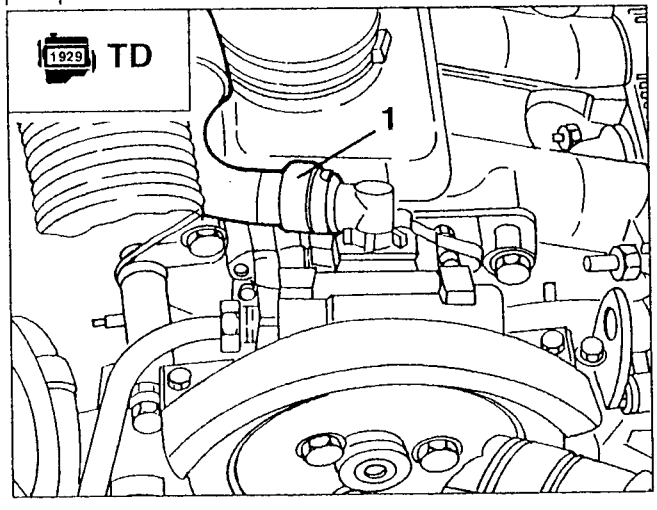

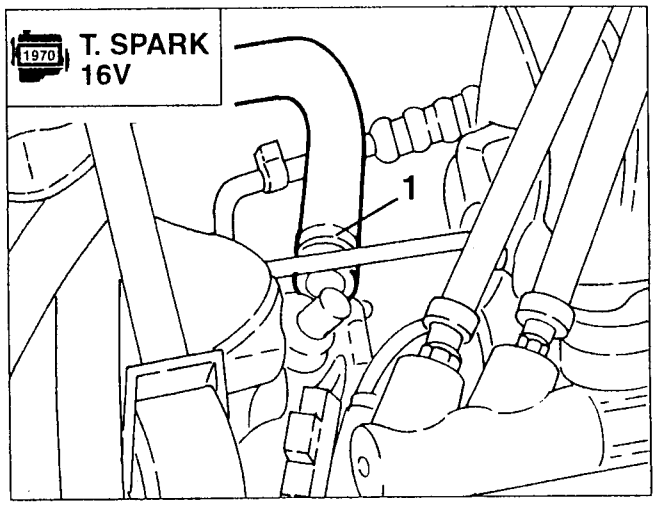

- Idle the engine. Check that the reservoir does not empty completely and turn the steering wheel completely to the left and to the right to bleed the air. Top up to the maximum notch on the reservoir.

IMPORTANT:
The power steering system is self-bleeding.
It is bleed by steering completely to the left and to the right with the engine running.
Perform this operation whenever the connecting pipes are connected/disconnected.

Steering stiffness can be caused by the pump drive pulley belt slipping or insufficient oil level.
If the pump, the operating cylinder or the distribution valve break down, the power steering unit will work like and ordinary mechanical steering system.

POWER STEERING GUARDS
Specific for 1970 T. SPARK 16V

Two sound-proofing guards are fitted on the ends to the power steering unit, as shown in the illustration.

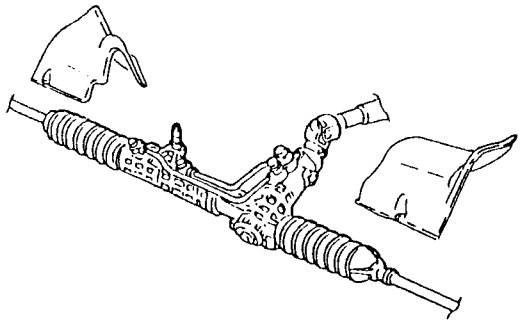

DESCRIPTION

The power steering unit reduces the force required to turn the steering wheel when the vehicle is stationary and ensures accurate steering at high speeds. Moreover, it allows a special steering column (5) structure in two sections which confers a higher degree of passive safety in the event of front crashes. The system consists of a pump (2) directly operated by the engine by means of a belt.

The pump collects oil via the delivery manifold from the reservoir (2) located in the engine compartment. It sends the pressurised oil through a pipe to the distribution valve located on the power steering unit (3).
The distribution valve is connected by means of a pipe to the reservoir to allow the oil let out of the cylinder flow back to the reservoir.
This pipe contains a oil cooling serpentine (6).

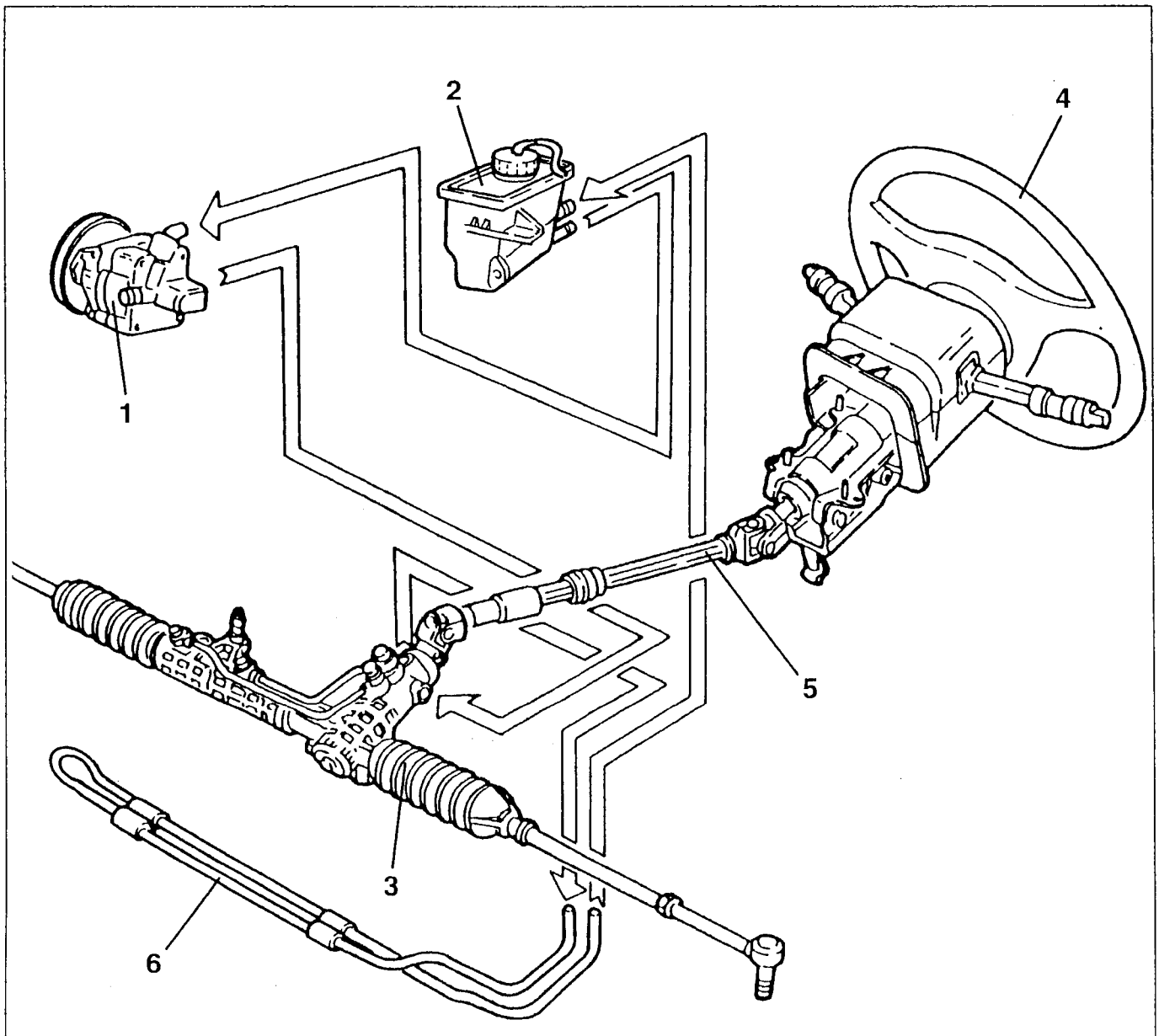

1. *Power steering pump*
2. *Reservoir*
3. *Power steering unit*
4. *Steering wheel*
5. *Steering column*
6. *Cooling serpentine*

POWER STEERING RESERVOIR

REMOVAL/REFITTING

- Remove the power steering reservoir cap and suck the oil with a suitable syringe.
1. Remove the oil filler cap.
2. Remove the fastening screws and remove the tappet cover.

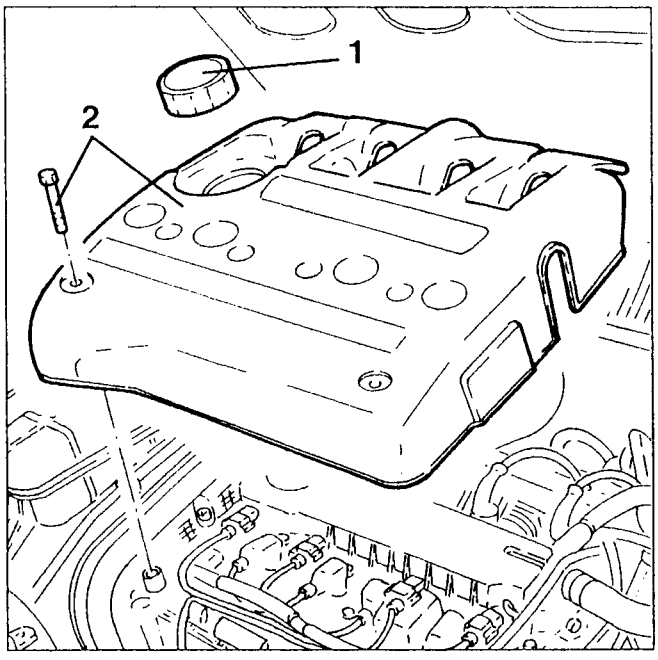

- Refit the engine oil filler cap.
1. Disconnect the fuel fume re-circulation quick coupling pipe.
- Release the fuel fume re-circulation pipe from the power steering reservoir clip and shift it.
2. Release the coolant return to reservoir pipe from the clips on the intake manifold.

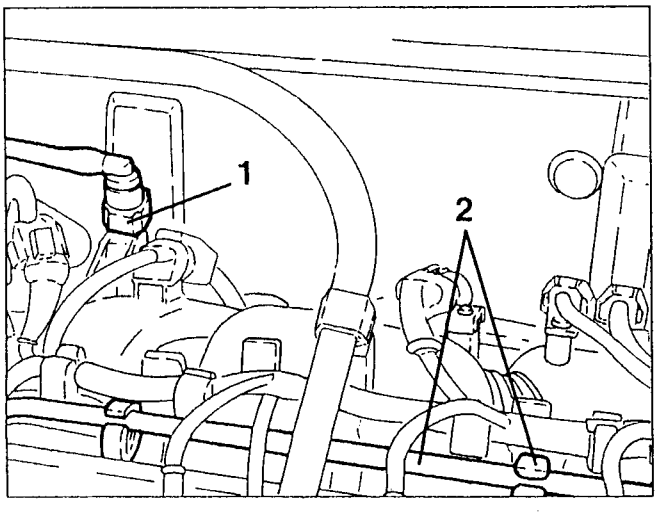

1. Remove the fastening screws and remove the engine reaction tie-rod.
2. Remove the fastening screws and remove the upper engine reaction tie-rod support.

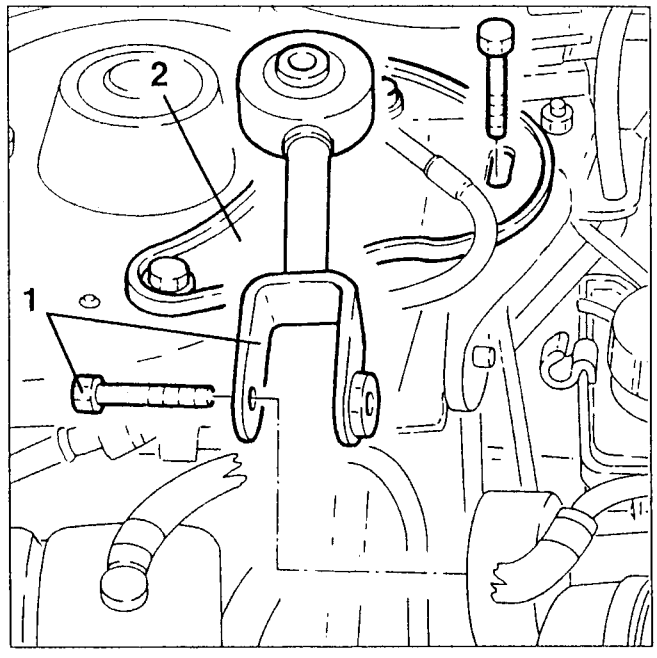

1. Remove the power steering reservoir fastening screws.
2. Disconnect the power steering reservoir delivery/return pipes and remove the reservoir.

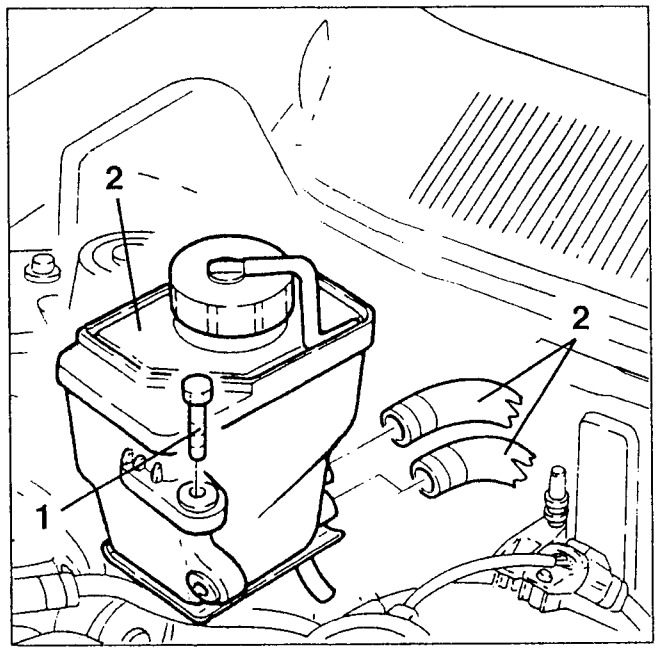

POWER STEERING PUMP

REMOVAL/REFITTING

- Position the vehicle on a shop jack.
- Remove the power steering reservoir cap and suck the oil with a suitable syringe.

1. Remove the oil filler cap.
2. Remove the fastening screws and remove the tappet cover.

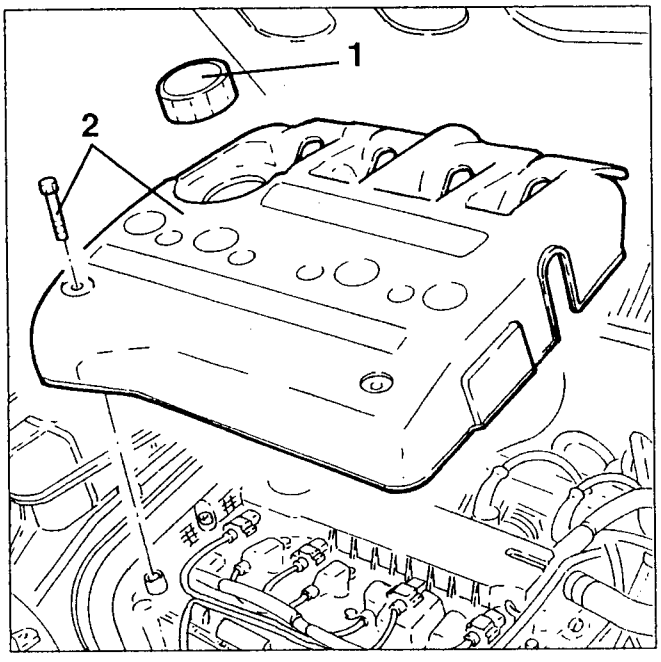

- Refit the engine oil filler cap.

1. Disconnect the fuel fume re-circulation quick coupling pipe.
- Release the fuel fume re-circulation pipe from the power steering reservoir clip and shift it.

2. Release the coolant return to reservoir pipe from the clips on the intake manifold.

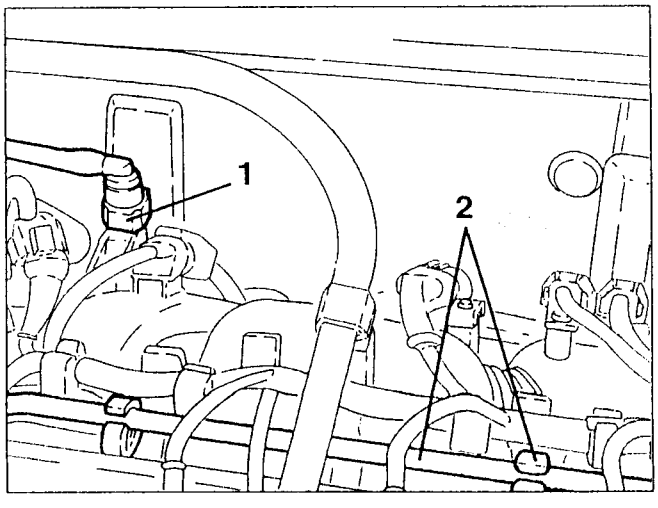

1. Remove the fastening screws and remove the engine reaction tie-rod.
2. Remove the fastening screws and remove the upper engine reaction tie-rod support.

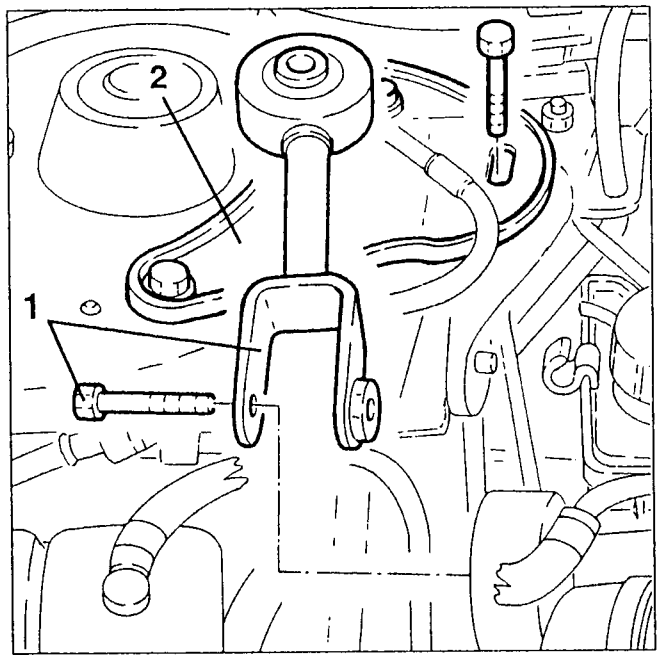

1. Remove the power steering reservoir fastening screws.
2. Disconnect the intake pipe from the power steering unit.
3. Disconnect the power steering reservoir delivery/return pipes and remove the reservoir.

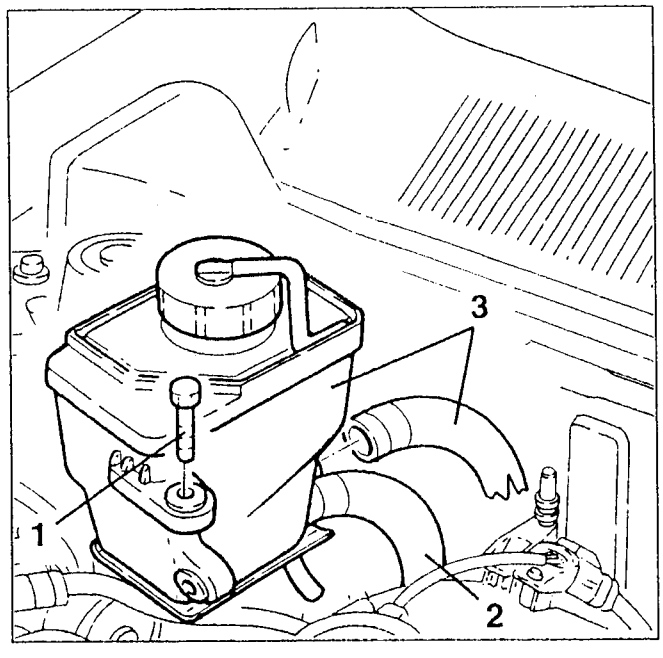

1. Disconnect the power steering unit delivery pipe from the pump.
2. Remove the fastening nut and shift the ABS electric connection support rod.
3. Remove the fastening nut and screw and remove the lower engine reaction tie-rod support.

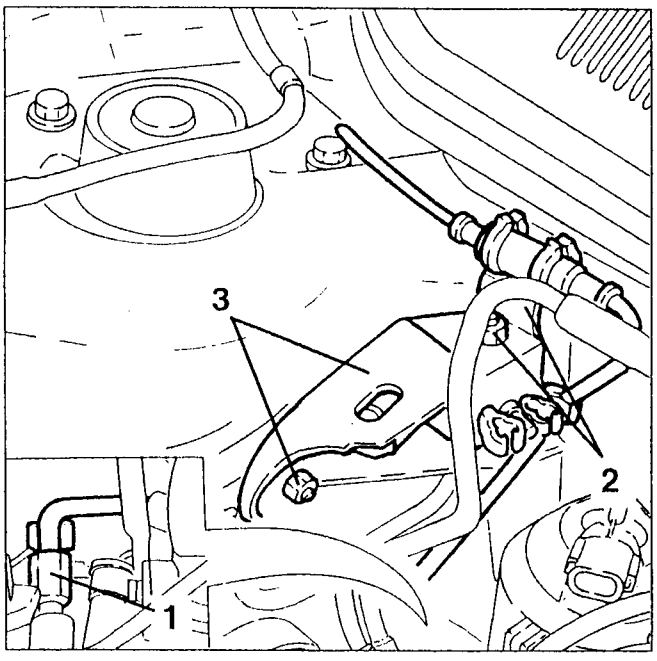

1. Release the timing sensor wiring from the clip on the guard.
2. Remove the fastening screws and remove the guard.

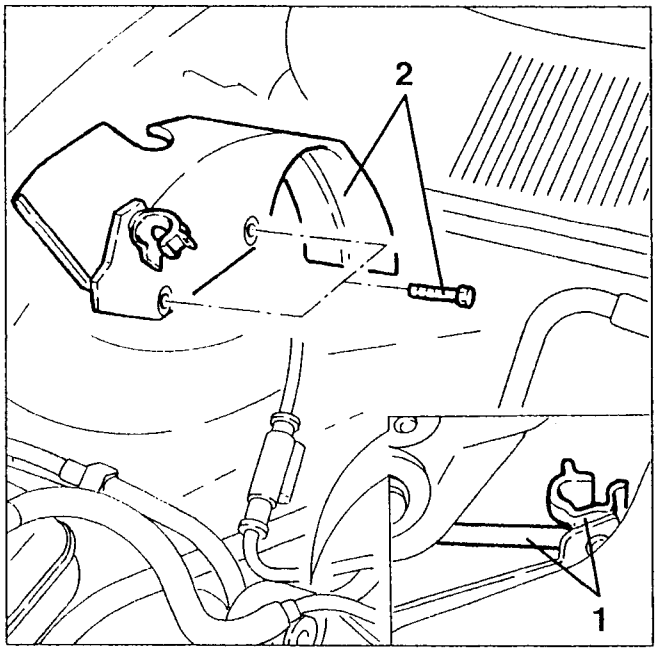

- Lift the vehicle.
1. Slacken the auxiliary unit belt, by means of the belt take-up, and remove it.

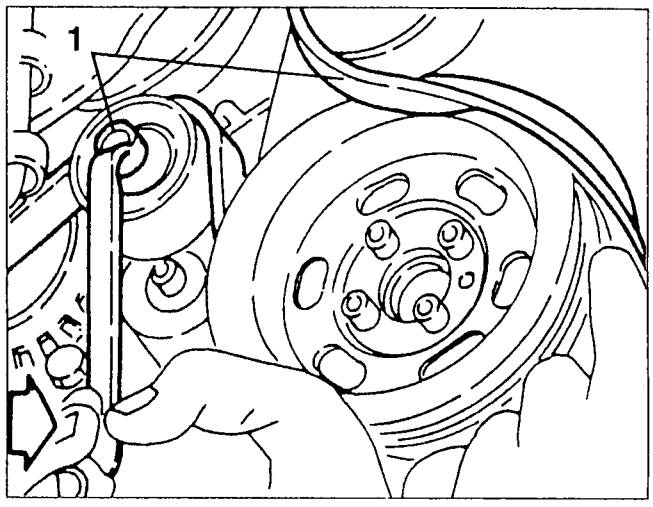

1. Remove the fastening screw and remove the belt take-up device.

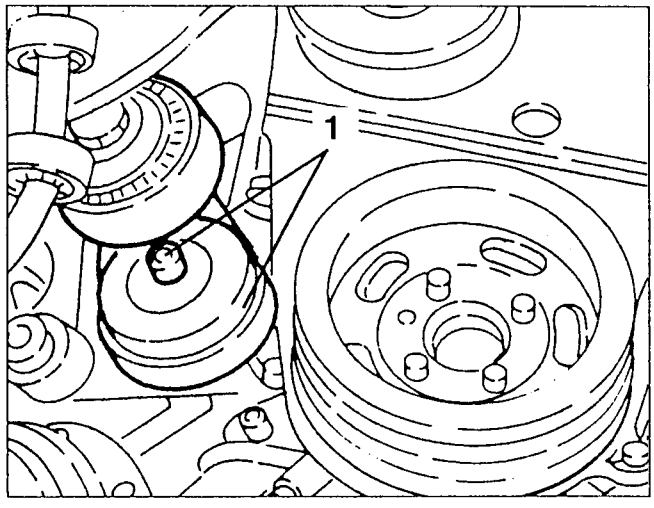
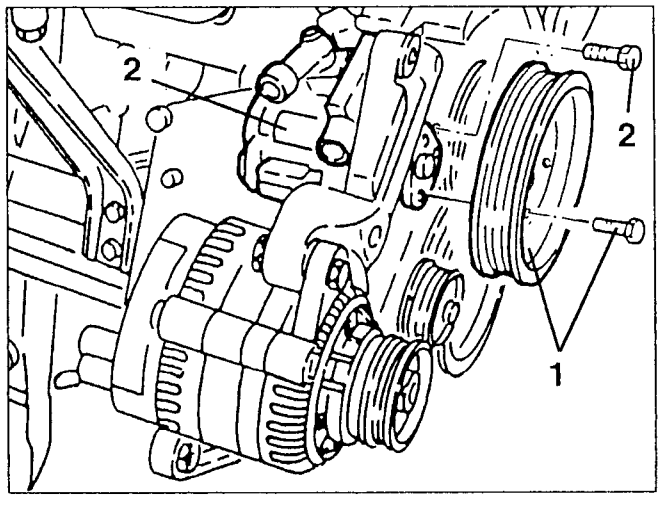
1. Hold the pump shaft still and remove the power steering pump pulley. Remove the pulley.
2. Remove the fastening screws and remove the power steering pump.