INDEX

CLUTCH COMMAND

- Clutch pump 1
- Clutch pedal.....1

- Clutch pump ('98 Models) 2
- Clutch pedal ('98 Models).....2

For the information not given here, see the corresponding groups of "145 - 146 - Base Manual".

CLUTCH PUMP

REMOVAL/REFITTING

- Empty the brake/clutch fluid reservoir with a suitable syringe.
- Remove the air intake manifold (see specific paragraph).

1. From inside the engine compartment, disconnect the pipe fitting from the clutch pump.

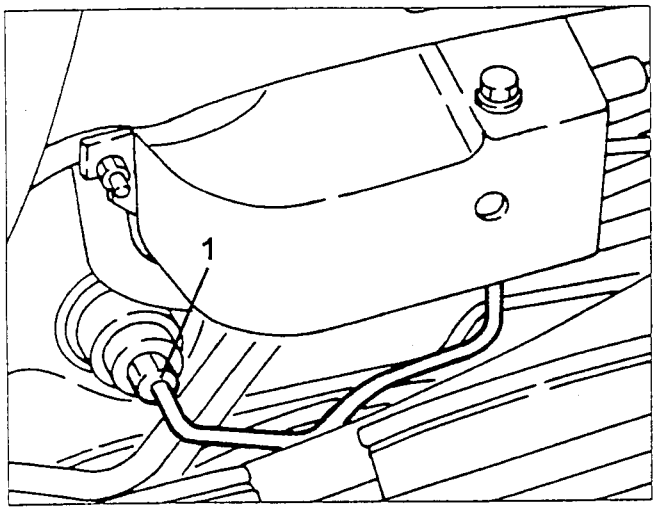

1. From inside the passenger compartment, disconnect the reservoir fluid feed pipe from the clutch pump.
2. Remove the split pin.
3. Remove the two clutch pump fastening nuts.
4. Remove the clutch pump by releasing it from the pedal pin.

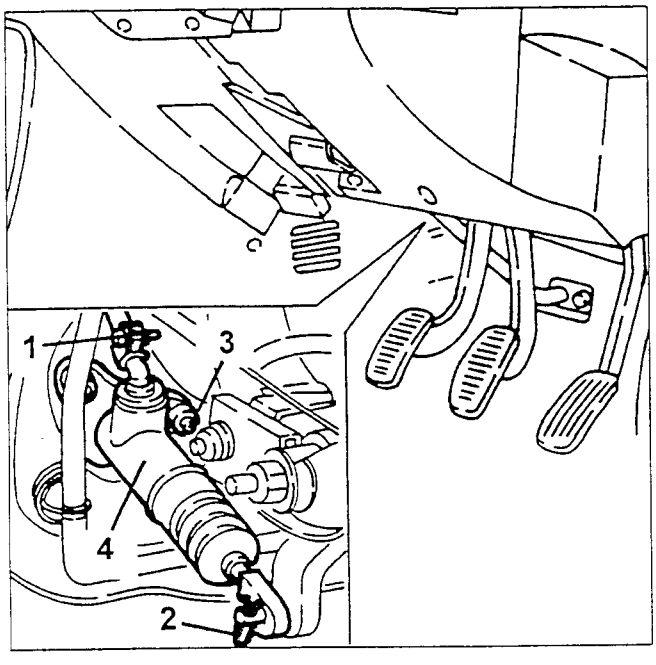

CLUTCH PEDAL

REMOVAL/REFITTING

- Remove the steering column (see ASSEMBLY 41).

1. Remove the clutch pump retaining split pin from the pedal pin.
2. Loosen the two clutch pump fastening nuts and release the pump from the pedal pin.

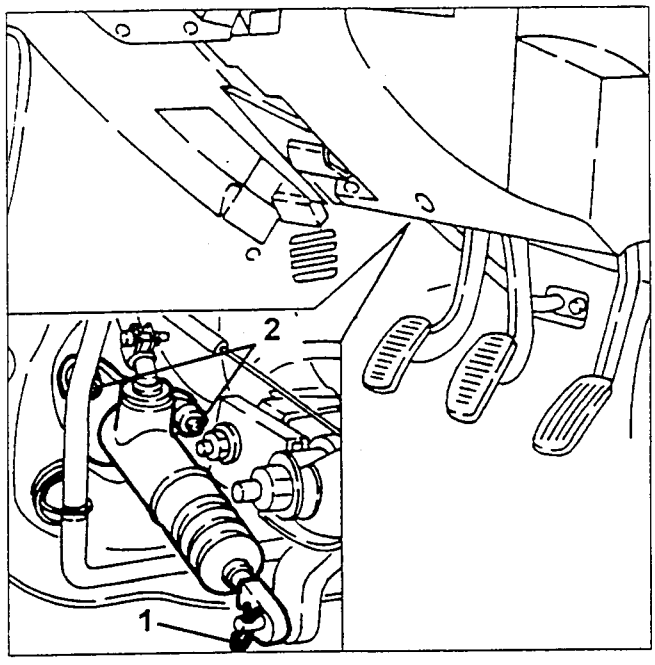

- Loosen the two valve bracket fastening screws.

1. Loosen the fastening bolt and remove the clutch pedal.
2. Take the clutch pedal return spring.

- At the stand, remove the clutch pedal bushing, if required.

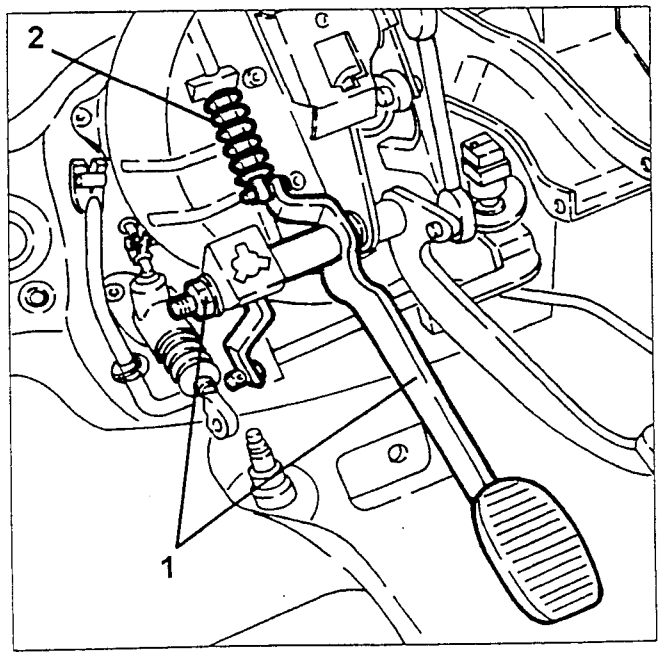

CLUTCH PUMP ('98 MODELS)

REMOVAL/REFITTING

- Empty the brake/clutch fluid reservoir with a suitable syringe.
- Remove the modular air intake manifold (see specific paragraph).
1. From inside the engine compartment, disconnect the pipe fitting from the clutch pump.

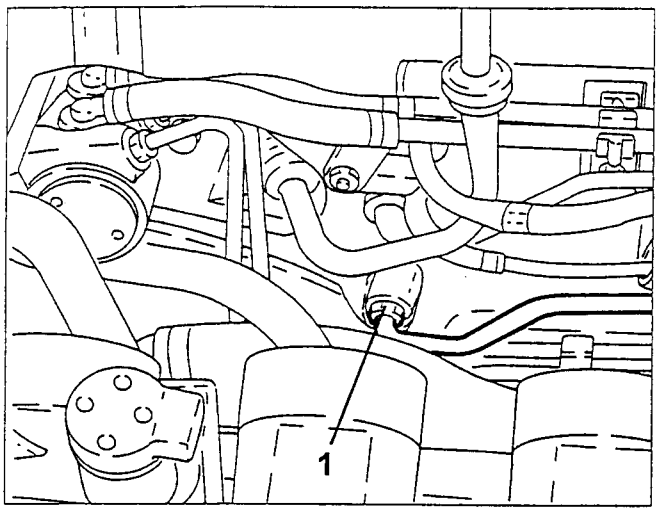

- Remove the accelerator pedal (see specific paragraph).
1. From inside the passenger compartment, disconnect the reservoir feed pump from the clutch pump.
2. Remove the split pin.
3. Remove the two clutch pump fastening nuts.
4. Remove the clutch pump by releasing it from the pedal pin.

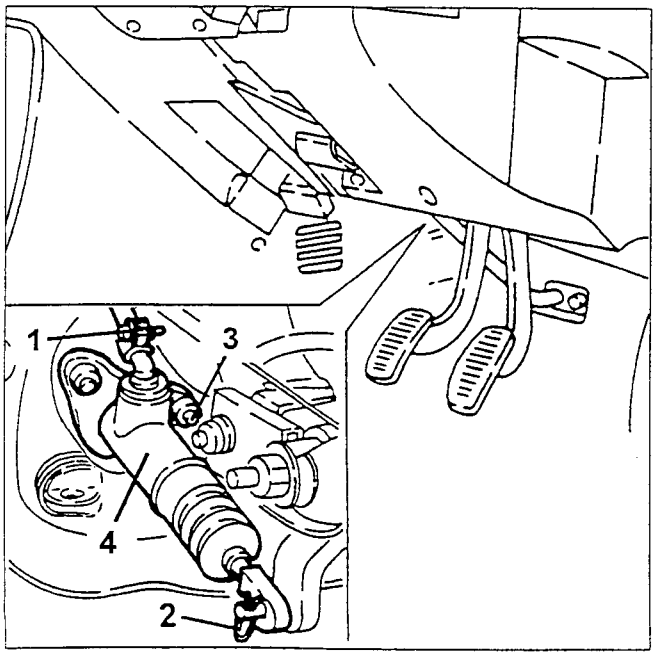

CLUTCH PEDAL ('98 MODELS)

REMOVAL/REFITTING

- Loosen the fastening screw and release the steering column from the power steering unit pinion.
- Remove the accelerator pedal (see specific paragraph).
1. Remove the clutch pump split pin from the respective pedal pin.
2. Loosen the two clutch pump fastening nuts and release it from the respective pedal pin.

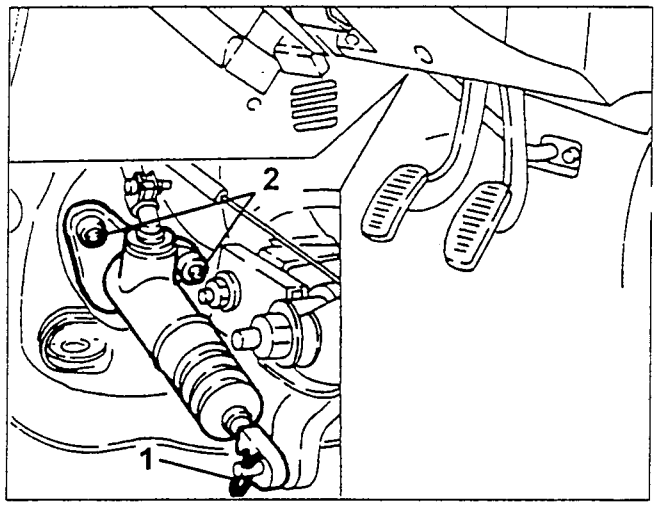

- Loosen the two valve bracket fastening screws.
1. Loosen the nuts and remove the clutch pedal bracket.
2. Release the screw just enough to remove the clutch pedal.
3. Take the clutch pedal return spring.
- At the stand, remove the clutch pedal bushing, if required.

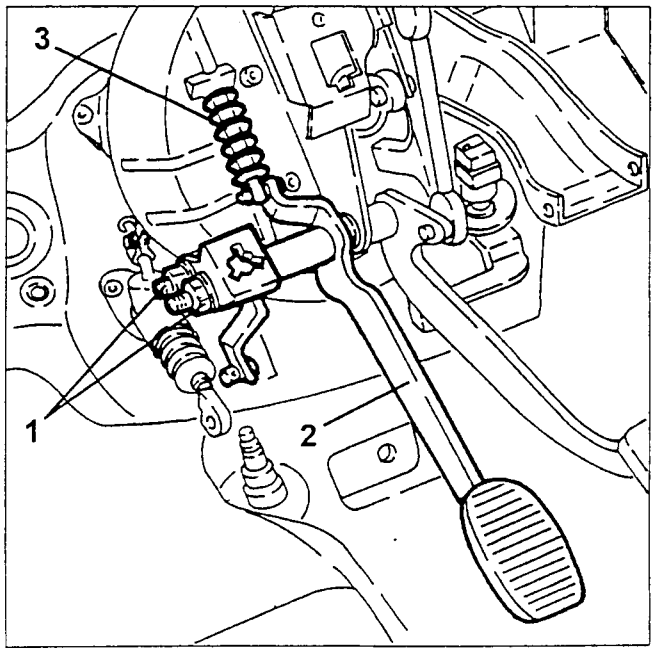

CLUTCH

INDEX

CLUTCH MECHANISM 1351 1596 1712 16V

- Description. 1
- Clutch plate and pressure plate. 2

CLUTCH COMMAND 1351 1596 1712 16V

- Clutch pump 3
- Clutch pedal. 5
- Clutch control cylinder 5
- Bleeding air from the hydraulic system 7
- Minimum brake - clutch fluid level sensor 7

CLUTCH MECHANISM 1929 TD

- Description. 8
- Clutch plate and pressure plate. 9

CLUTCH COMMAND 1929 TD

- Clutch pump 11
- Clutch pedal. 12
- Clutch control cylinder 12
- Bleeding air from the hydraulic system 13
- Minimum brake - clutch fluid level sensor 13

CLUTCH MECHANISM 1970 T. SPARK 16V

- Description . . . . . (*)
- Clutch plate and pressure plate 14

CLUTCH COMMAND 1970 T. SPARK 16V

- Clutch pump . . . . . (*)
- Clutch pedal . . . . . (*)
- Clutch control cylinder 16
- Bleeding air from the hydraulic system. . . . . (*)
- Minimum brake - clutch fluid level sensor 17

CLUTCH MECHANISM 1370 1598 1747 T. SPARK 16V

- Description . . . . . (*)
- Clutch plate and pressure plate . . . . . (▲)
- Clutch plate and pressure plate 1370 T. SPARK 16V with gearbox C.513.5 from chassis n° 18

CLUTCH COMMAND 1370 1598 1747 T. SPARK 16V

- Clutch pump . . . . . (*)
- Clutch pedal . . . . . (*)
- Clutch control cylinder . . . . . (▲)
- Bleeding air from the hydraulic system . . . . . (*)
- Minimum brake - clutch fluid level sensor . . . . . (▲)

(*): See engine 1929 TD

(▲): See engine 1970 T. SPARK 16V

DESCRIPTION

The clutch adopted is a dry single-plate type with diagraphm pressure plate springs.
The clutch is released through a hydraulic device formed of a reservoir (1) shared with the braking system, a pump (2) fastened to the pedal unit, a control cylinder (3) fastened to the rear engine cover and a thrust bearing (4).
The pedal-operated pump transmits the fluid pressure increase through a hose to the control cylinder.
A prod on the control cylinder acts on the clutch release control fork which moves the self-centering thrust bearing overcoming the action of the diaphragm pressure plate springs.

In addition to reducing the effort exerted on the pedal, the adoption of the hydraulic clutch release device makes it possible to:
- increase reliability of the control compared with the conventional mechanical system.
- improve progression, due to the damping of the hydraulic system during disengagement which prevents jerking, particularly when the torque transmitted is high.
- achieve greater operating precision, as this device enables constant height adjustment of the clutch pedal.
- increase driving comfort because of the reduction of the level of vibrations transmitted from the engine, due to the damping effect of the oil.

In order to comply with current regulations on the subject of environmental pollution, ecological (asbestos-free) clutch plate friction gaskets have been adopted.

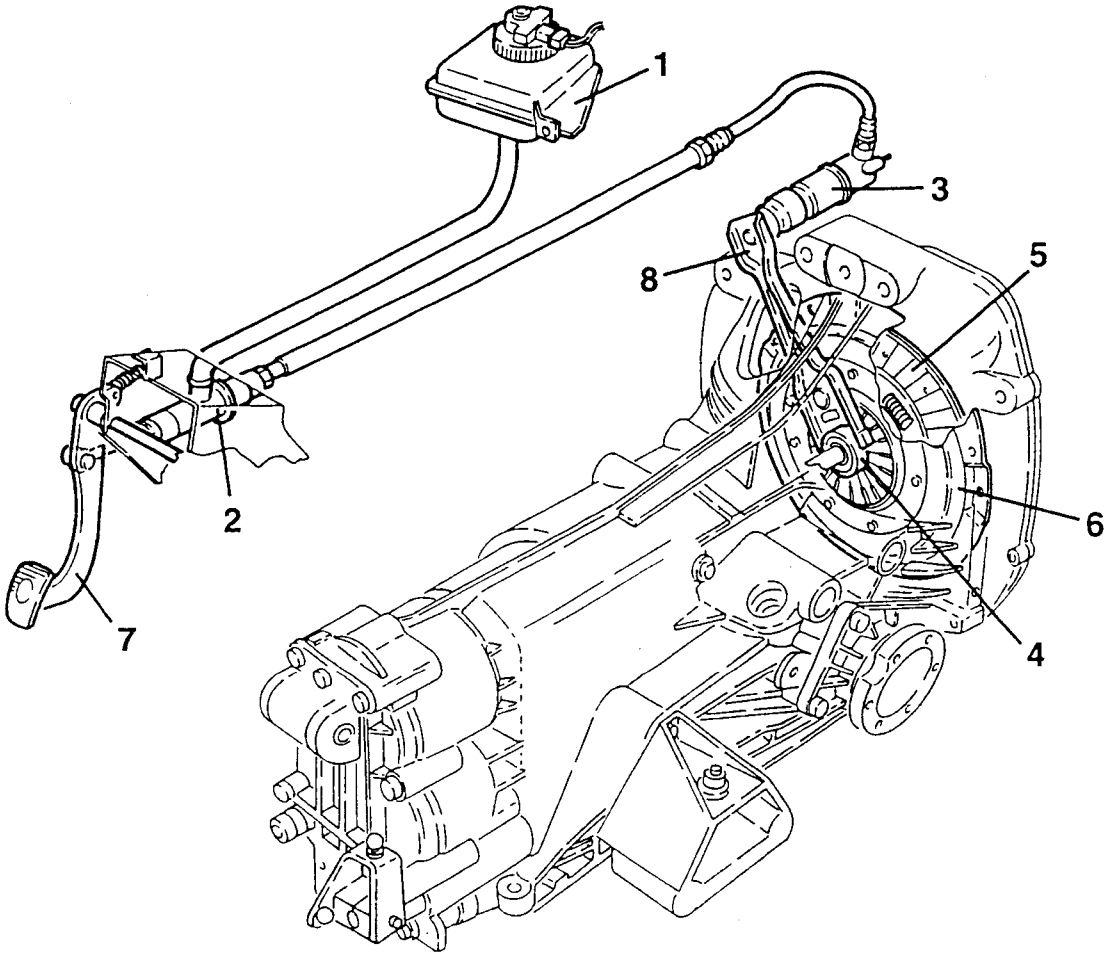

1. *Brake-clutch system reservoir*
2. *Clutch pump*
3. *Clutch control cylinder*
4. *Thrust bearing*
5. *Clutch plate*
6. *Pressure plate*
7. *Clutch control pedal*
8. *Fork*

CLUTCH PLATE AND PRESSURE PLATE

REMOVAL/REFITTING

- Remove the gearbox-differential unit (see GROUP 21).
1. Install the flywheel locking tool N° 1.820.059.000 (A.2.0378).
2. Install tool N° 1.820.108.000 (A.4.0144) in the clutch plate hub.
3. Slacken the screws fastening the pressure plate to the engine flywheel.

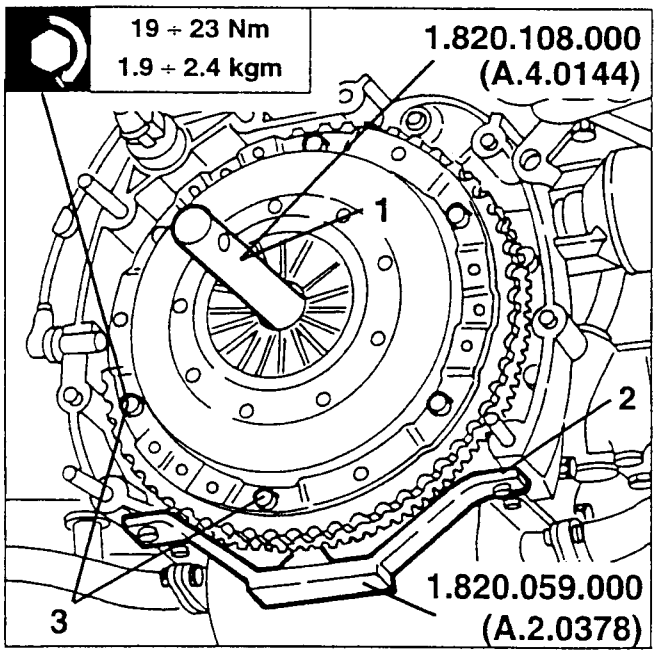

1. Remove the pressure plate.
2. Remove the clutch plate.

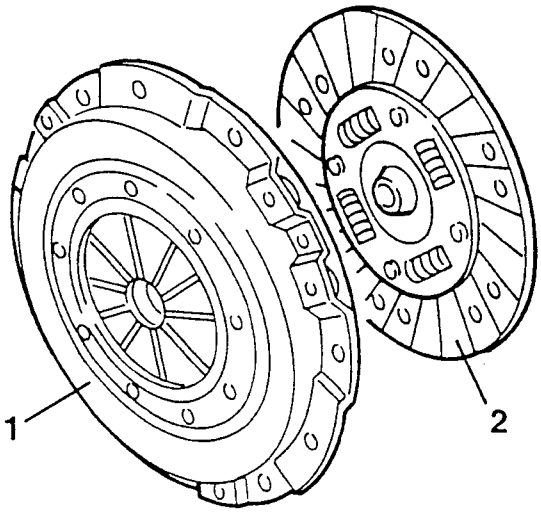

CHECKS AND INSPECTIONS

1. Check the gaskets for even wear and that the thickness of the clutch plate is not below the minimum specified.

Thickness "S" of clutch plate (mm)	
New	At the wear limit
7.7	6.1

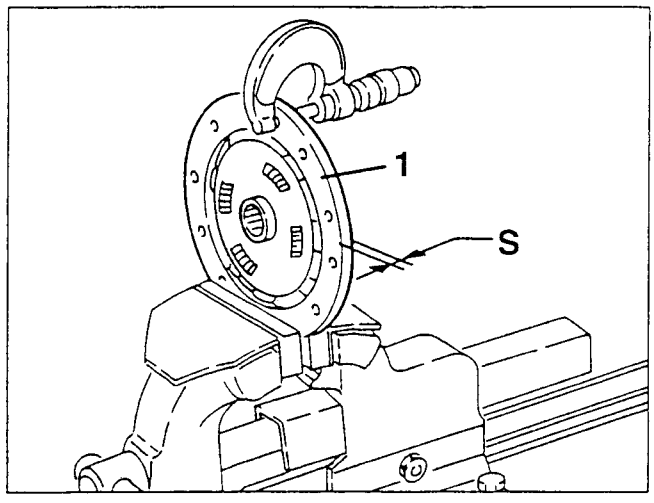

- Check that there are no signs of burning or vitrification, that fastening is correct and that the springs are intact.
Check that the clutch plate hub is intact, runs smoothly and that there is no excessive play on the drive shaft coupling.
- Check the working surfaces of the flywheel and pressure plate for signs of overheating, uneven wear, nicks or missing parts.
1. Also check the thrust bearing for noise, excessive play and freedom of movement on the drive shaft.
If necessary, change any worn parts.
2. Check the clutch control fork for cracks, distorsion and excessive wear in the working areas. Change it if necessary.

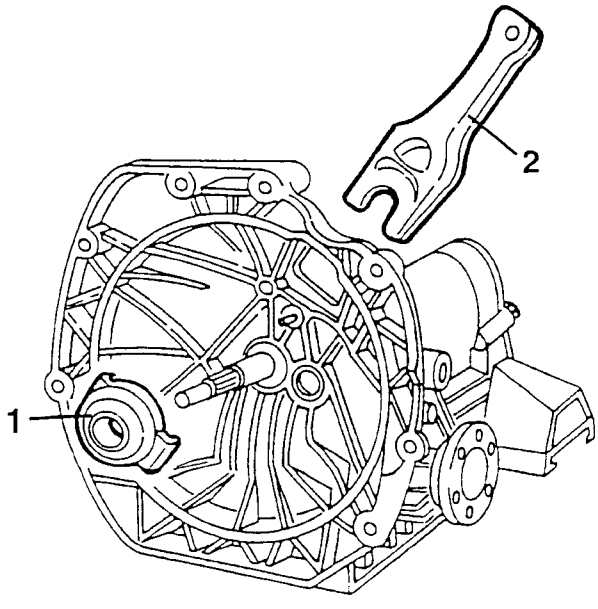

CLUTCH PUMP

REMOVING/REFITTING

- Disconnect the battery (-) terminal.
- Empty the brake - clutch fluid reservoir using a suitable syringe.

1. Slacken the fastening screw and raise the brake - clutch fluid reservoir just enough to disconnect the connection pipe to the clutch pump from it.

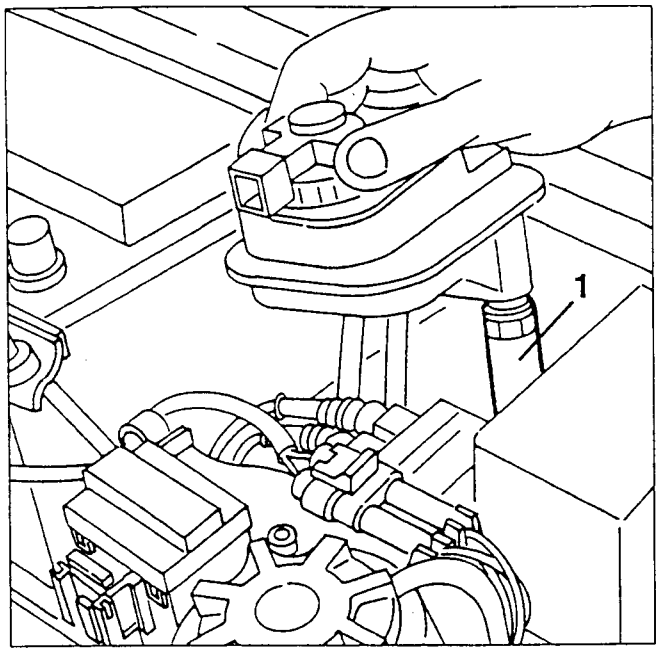

1. Slacken the two fastening nuts and move the power steering tank sideways without disconnecting the hoses.

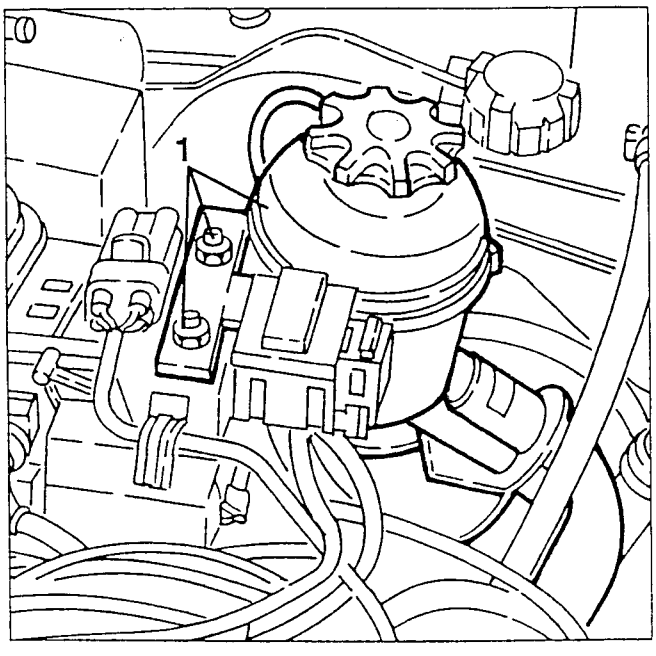

1. Disconnect the intermediate fitting of the hose connecting the pump to the clutch cylinder and freethe hoses in question of their hose clamps.

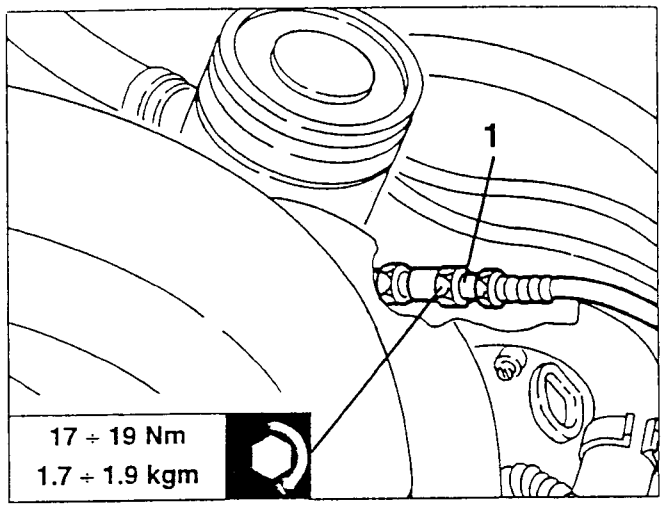

1. Working from the passenger compartment, slacken and remove the left dashboard trim.

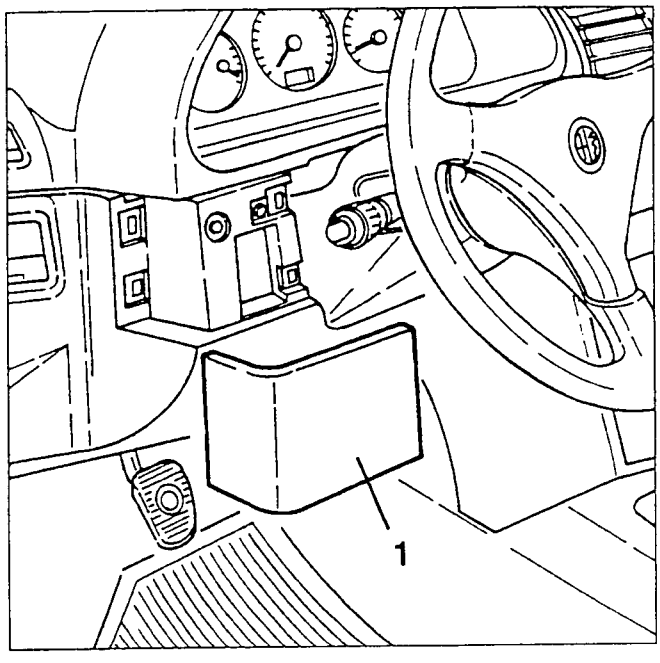

1. Remove the driver's air vent from the dashboard.

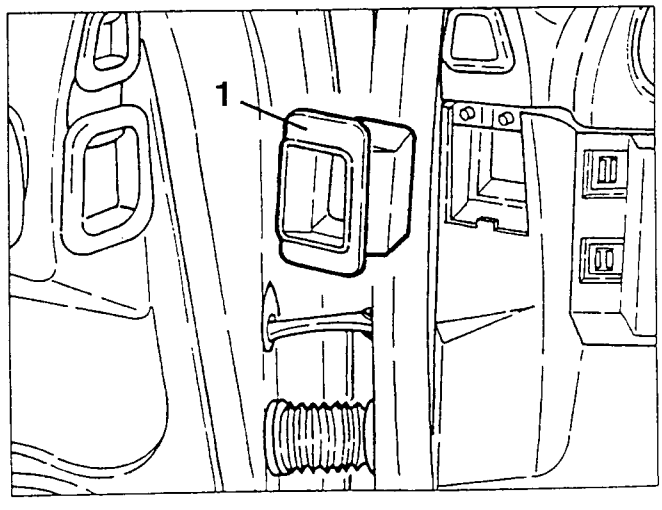

1. Slacken the six fastening screws and remove the fusebox cover.

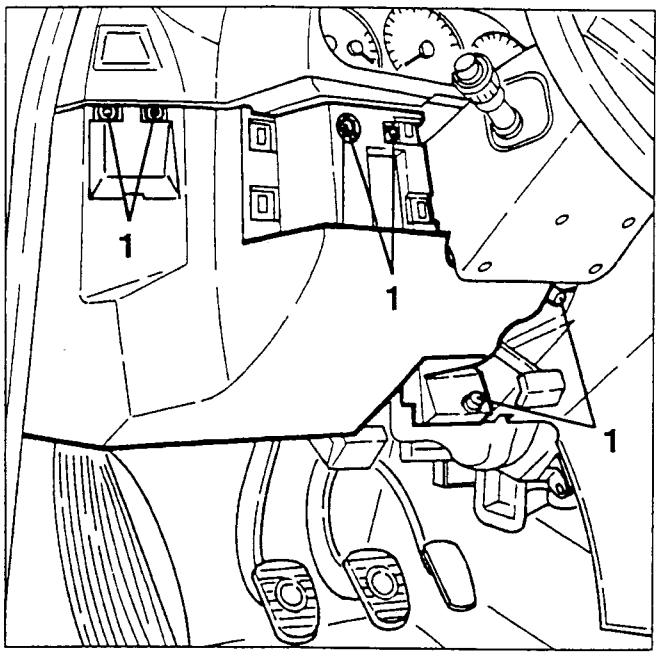

1. Slacken the fusebox fastening nuts and move it sideways.
- Slacken the fasteners of the fusebox support bracket and move it sideways.

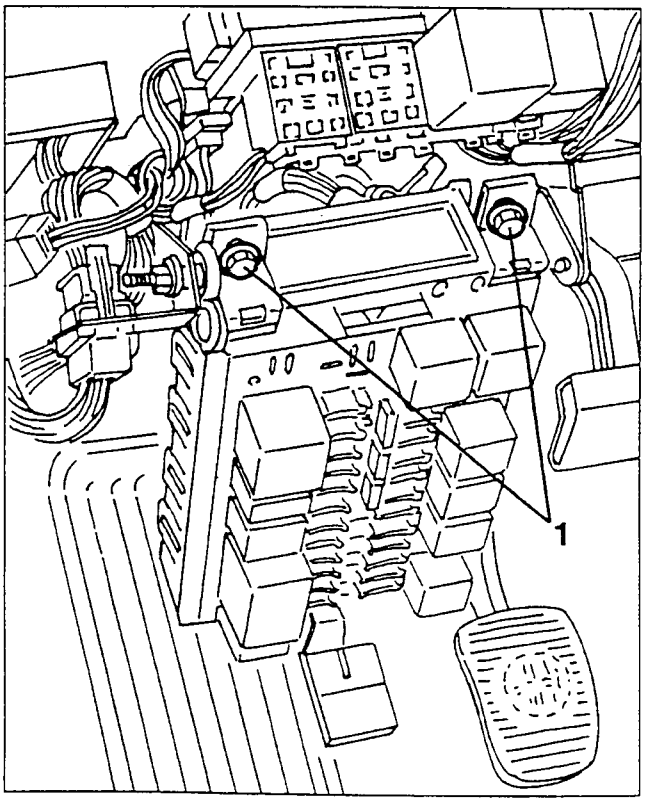

1. Remove the safety catch and disconnect the clutch pump from the pedal.
2. Slacken the two clutch pump fastening nuts.

3. Move the clutch pump backwards enough to disconnect the reservoir connection pipe from it.

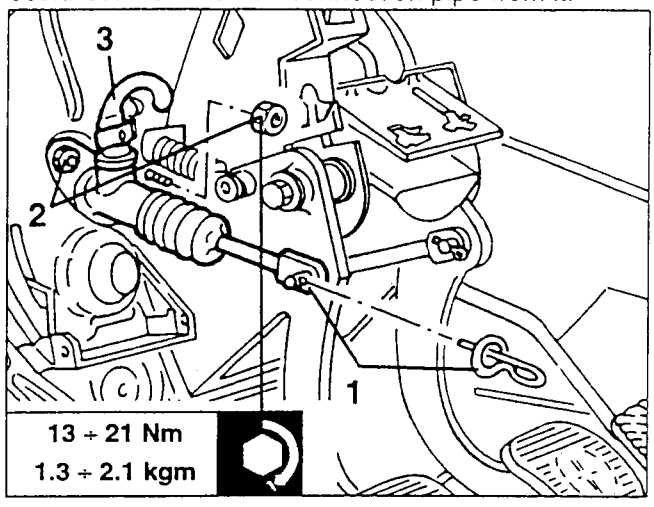

1. Remove the clutch pump complete with connection pipe to the clutch cylinder.

When refitting the pump bleed the air from the system (see specific paragraph).

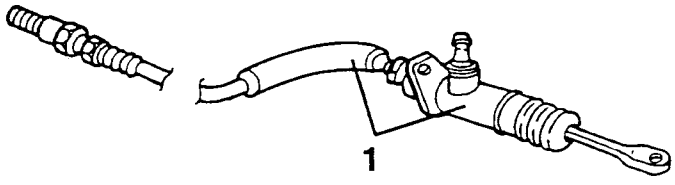

DIS-ASSEMBLY/RE-ASSEMBLY

- Position the clutch pump in a vice with protective jaws.
1. Slacken and remove the clutch cylinder connection pipe from the pump.

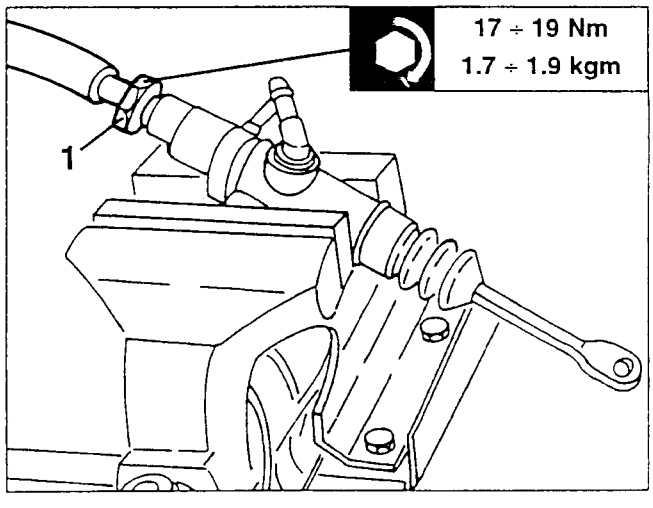

1. Remove the protection boot, remove the retainer ring and withdraw the piston from the pump body.
2. Remove the seal with fluid inlet connection from the reservoir.

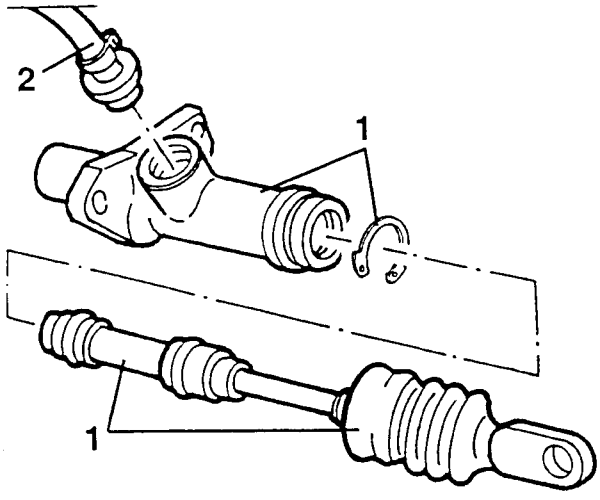

CHECKS AND INSPECTIONS

- Check that the piston and the inner surface of the cylinder show no signs of marking, scoring, scraping or rust. If the cylinder body reveals signs of scraping or seizure, change the pump assembly.

CLUTCH PEDAL

REMOVAL/REFITTING

1. Remove the safety catch and disconnect the clutch pump from the pedal.
2. Remove the return spring.

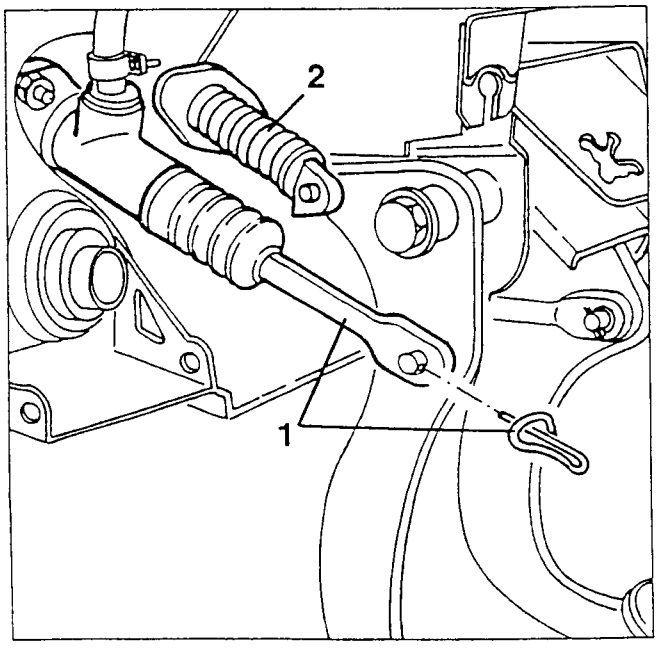

1. Slacken the fastening bolt and withdraw the clutch pedal complete with bush

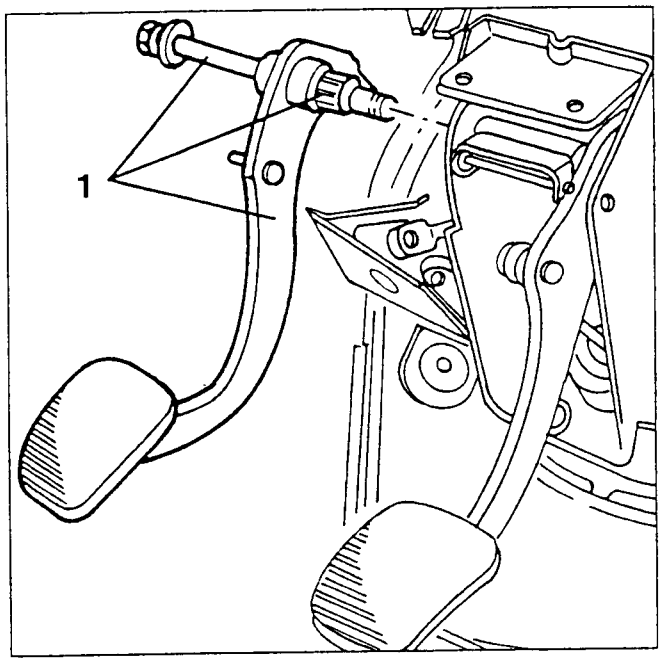

CLUTCH CONTROL CYLINDER

REMOVAL/REFITTING

- Remove the intake box (see GROUP 10).
- Empty the brake - clutch fluid reservoir, using a suitable syringe.
1. Slacken the two fastening nuts and move the power steering tank sideways without removing the hoses.

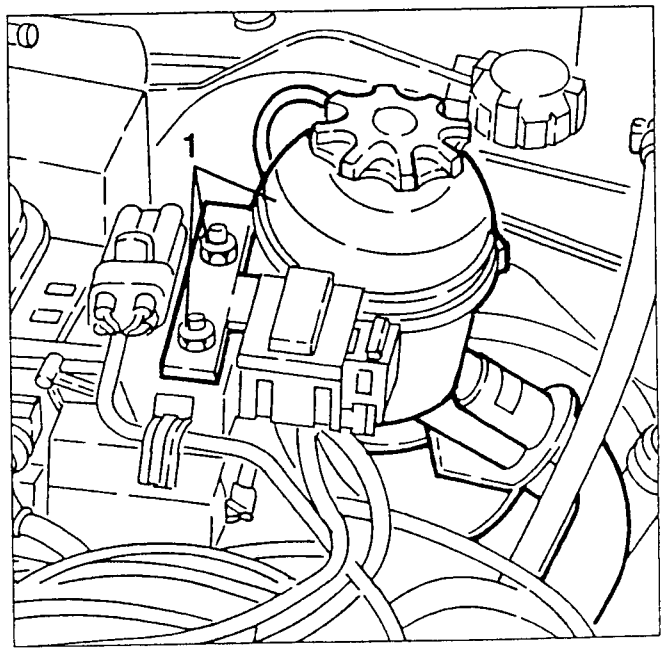

1. Disconnect the intermediate union of the hose connecting the pump to the clutch cylinder.
2. Remove the pipe fastening plate.

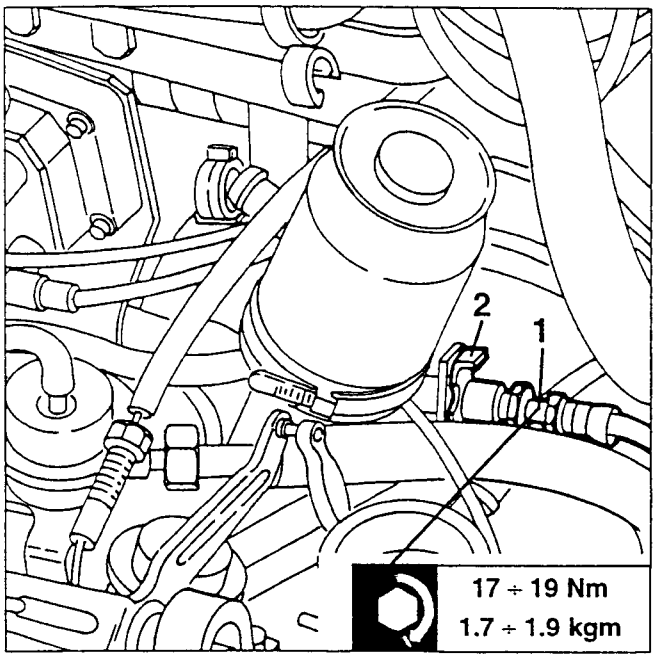

1. Remove the retainer ring and remove the clutch control cylinder.

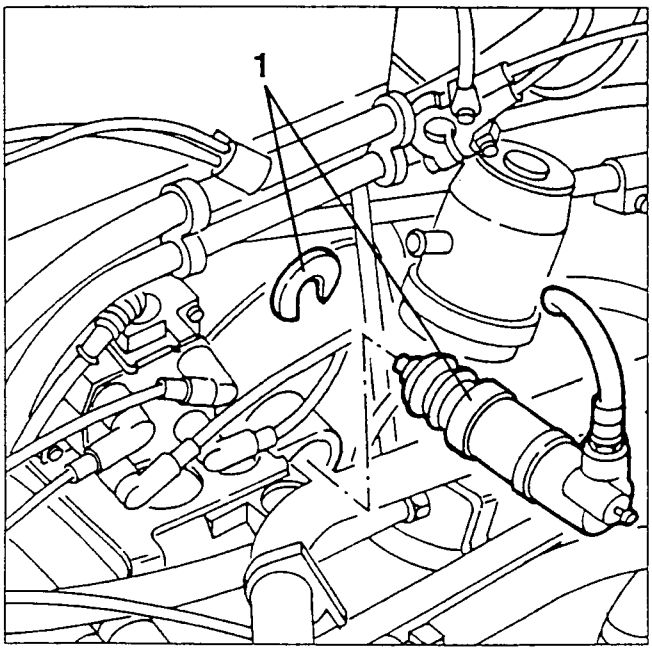

When refitting the cylinder bleed the air from the system (see specific paragraph).

DIS-ASSEMBLY/RE-ASSEMBLY

- Place the clutch control cylinder in a vice with protective jaws.

1. Slacken and remove the connection pipe to the clutch pump from the clutch control cylinder.

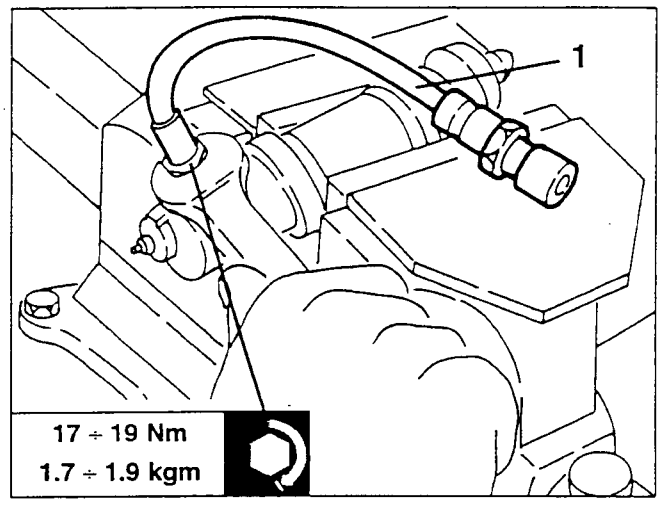

1. Withdraw the prod with its boot from the control cylinder, then separate them.
2. Remove the piston and the corresponding seals.
3. Remove the spring.
4. Only if necessary, remove the bleed screw from the control cylinder body.

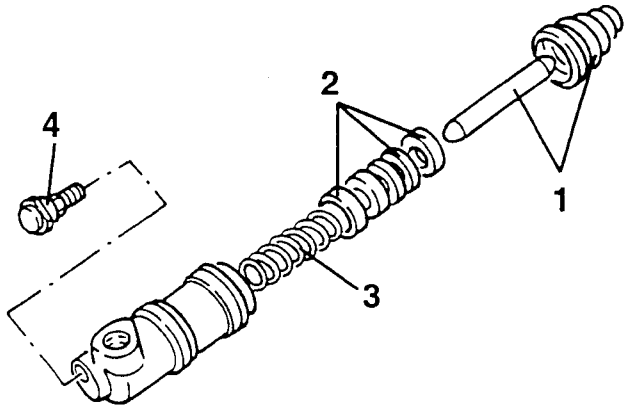

CHECKS AND INSPECTIONS

1. Check the piston and inner cylinder surface for signs of scoring and traces of rust.
2. Check that the spring is intact.
3. Check that the air bleeding outlet is not clogged.

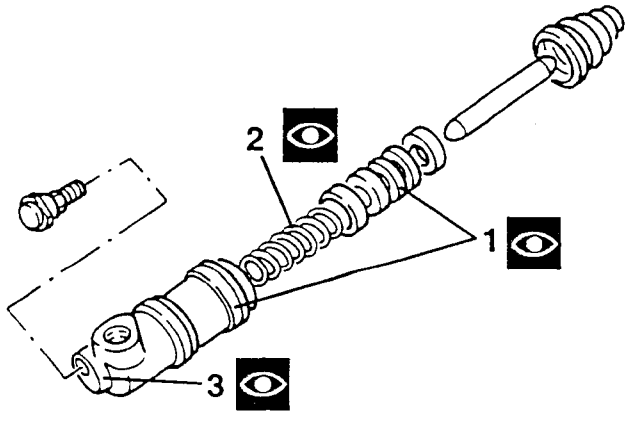

BLEEDING AIR FROM THE HYDRAULIC SYSTEM

CAUTION:
Never re-use the hydraulic fluid resulting from the bleeding operation.

1. Remove the cap on the clutch and brake fluid supply reservoir and if necessary top up the level with the specified fluid.
2. Remove the protective cap from the relief screw on the cylinder and push a hose onto the screw with the other end in a transparent container full of the same hydraulic fluid as the circuit.
3. Slacken the relief screw while pressing the clutch pedal allowing it to return slowly; repeat this operation until all the air trapped in the circuit has been eliminated.
- Then with the clutch pedal completely depressed, tighten the relief screw, remove the hose and refit the protective cap.

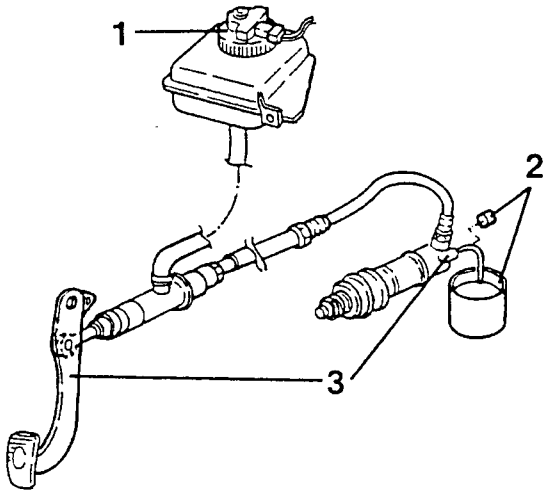

CAUTION:
During the bleeding operation, the level of the fluid in the reservoir must never fall below the "MIN" mark.

- Top up the level of the fluid in the reservoir and refit the cap.

CAUTION:
Brake/clutch fluid can damage the paintwork, therefore proceed with care.

- After bleeding, check that the clutch and gears disengage and engage properly.

1. Also check that the disengagement stroke of the clutch control cylinder is within the specified limits. This stroke is not adjustable and depends on the volume of the fluid displaced by the clutch pump piston.

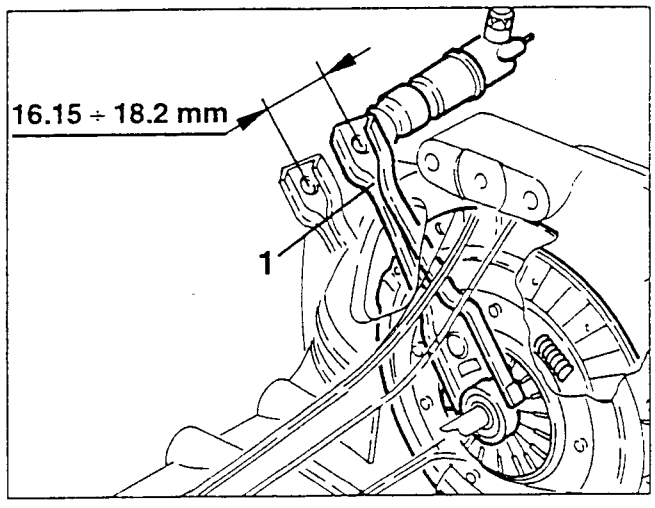

MINIMUM BRAKE - CLUTCH FLUID LEVEL SENSOR

REMOVAL/REFITTING

- Disconnect the battery (-) terminal.
1. Disconnect the electrical connection from the minimum brake - clutch fluid level sensor.
2. Slacken the cap with the built-in minimum brake - clutch fluid level sensor and remove it.

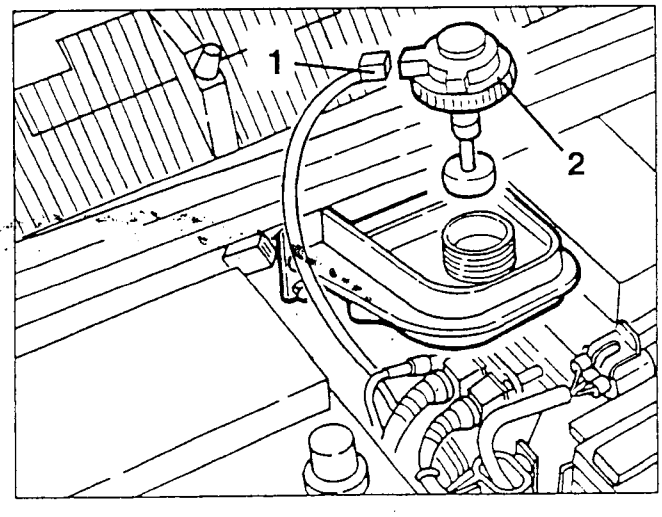

DESCRIPTION

The clutch adopted is a dry single-plate type with diaphragm pressure plate springs.
The clutch is released through a hydraulic device formed of a reservoir (1) shared with the braking system, a pump (2) fastened to the pedal unit, a control cylinder (3) fastened to the gearbox cover and a thrust bearing (4).
The pedal-operated pump transmits the fluid pressure increase through a hose to the control cylinder piston. A prod on the latter acts on the control fork which moves the thrust bearing overcoming the action of the diaphragm pressure plate springs.

In addition to reducing the effort exerted on the pedal, the adoption of the hydraulic clutch release device makes it possible to:
- increase reliability of the control compared with the conventional mechanical system.
- improve progression, due to the damping of the hydraulic system during disengagement which prevents jerking, particularly when the torque transmitted is high.
- achieve greater operating precision, as this device enables constant height adjustment of the clutch pedal.
- increase driving comfort because of the reduction of the level of vibrations transmitted from the engine, due to the damping effect of the oil.

In order to comply with current regulations on the subject of environmental pollution, ecological (asbestos-free) clutch plate friction gaskets have been adopted.

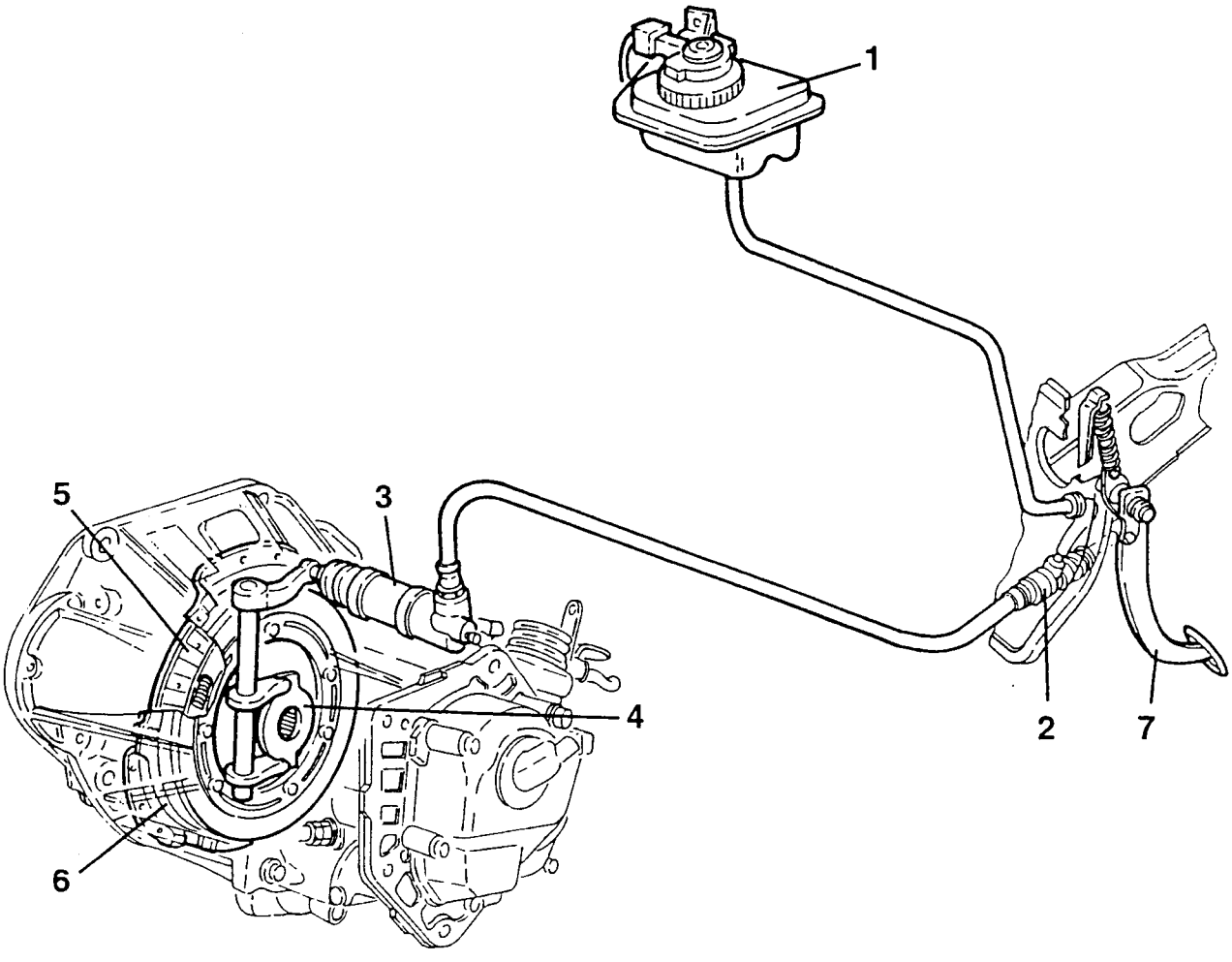

1. *Brake-clutch system reservoir*
2. *Clutch pump*
3. *Clutch control cylinder*
4. *Thrust bearing*
5. *Clutch plate*
6. *Pressure plate*
7. *Clutch control pedal*

CLUTCH PLATE AND PRESSURE PLATE

REMOVAL/REFITTING

- Remove the gearbox-differential unit (see GROUP 21).
- If only the clutch plate is being replaced, mark its position between the pressure plate and flywheel in order to simplify re-assembly operations.

1. Install the flywheel locking tool N° 1.820.228.000.
2. Install tool N° 1.820.126.000 in the clutch plate hub.
3. Slacken the screws fastening the pressure plate to the flywheel.

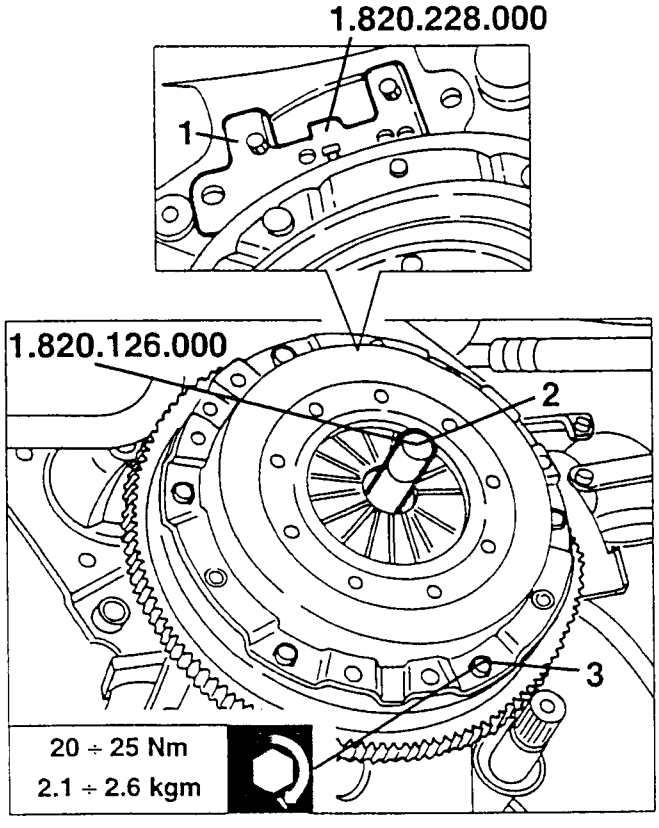

1. Remove the pressure plate.
2. Remove the clutch plate.

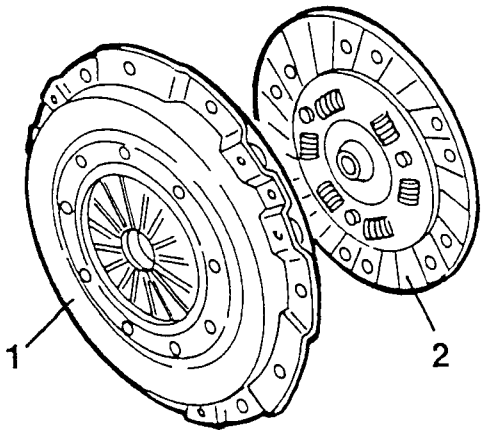

1. Withdraw the thrust bearing from its sleeve in the gearbox cover.

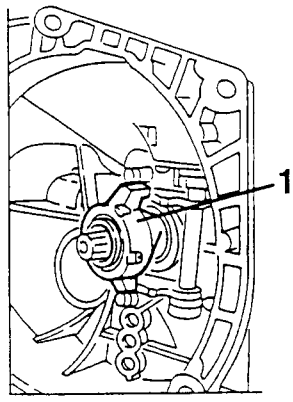

When refitting the bearing, make sure that it runs smoothly and noiselessly, if not, replace it.

- Only if necessary:

1. Remove the seeger lockring and withdraw the clutch engagement control lever.
2. Remove the anti-slip bush from the gearbox cover.
3. Working from inside the gearbox cover remove the clutch engagement sleeve control fork and pin.
4. Slacken the screws fastening the thrust bearing sleeve and remove it.

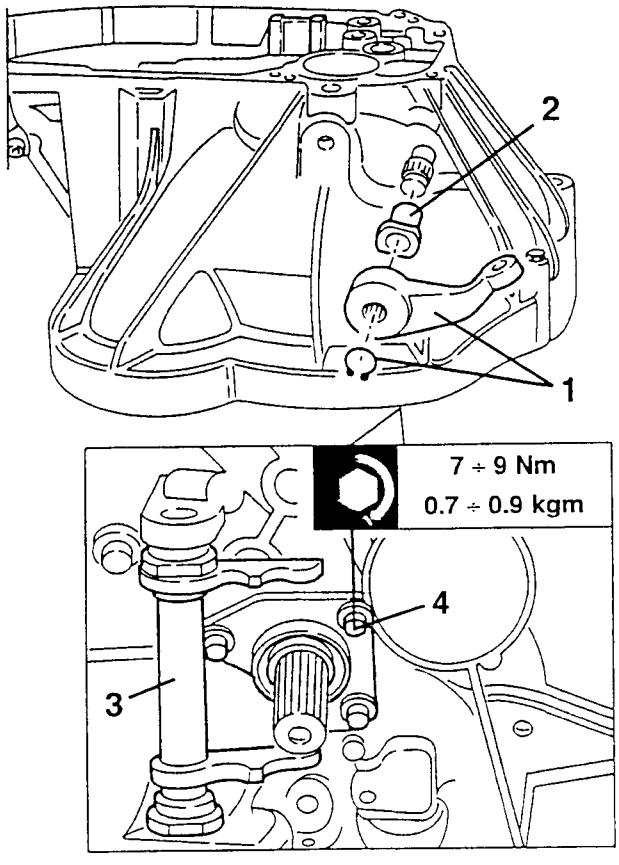

When refitting, install a new anti-slip bush each time the pin has too much play.
When refitting, grease the bushes and the sleeve with the specified product.
The sleeve complete with oil guard must be changed whenever it leaks oil.

CHECKS AND INSPECTIONS

1. Check the gaskets for even wear and that the thickness of the clutch plate is not below the minimum specified.

Thickness "S" of clutch plate (mm)	
New	At the wear limit
7.1 ÷ 7.7	6.1

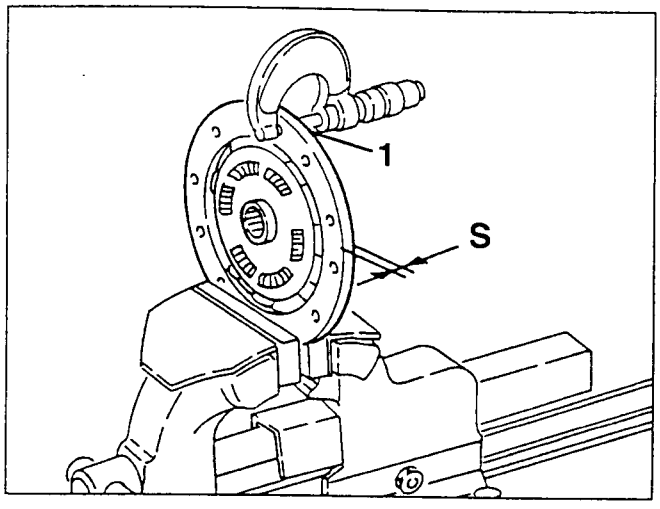

- Check that there are no signs of burning or vitrification, that fastening is correct and that the springs are intact.

Check that the clutch plate hub is intact, runs freely and that there is no excessive play on the drive shaft coupling.
- Check the working surfaces of the flywheel and pressure plate for signs of overheating, uneven wear, nicks or missing parts.
1. Check the thrust bearing for noise, excessive play and freedom of movement on the drive sleeve.
2. Check the fork for cracks, distorsion, freedom of movement and excessive wear on the working surfaces.

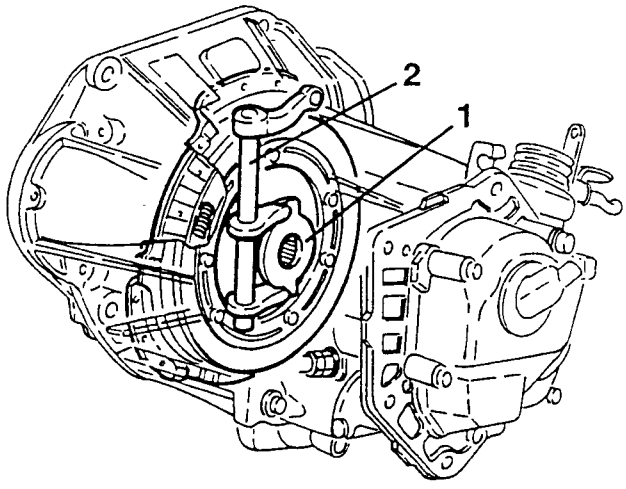

CLUTCH PUMP

REMOVAL/REFITTING

- Disconnect the battery (-) terminal.
- Empty the brake-clutch fluid reservoir using a suitable syringe.

1. Disconnect the reservoir connection hoses from the clutch pump.

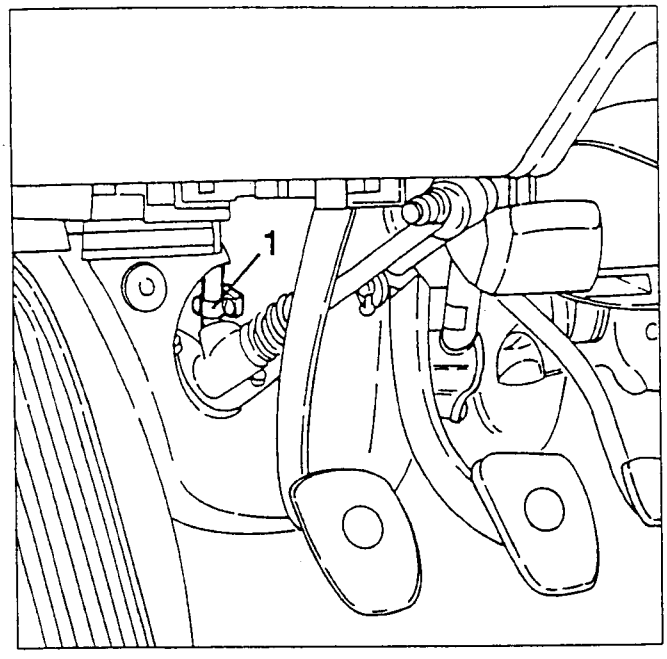

1. Remove the safety catch and disconnect the clutch pump from the pedal.
2. Slacken the two nuts fastening the clutch pump.

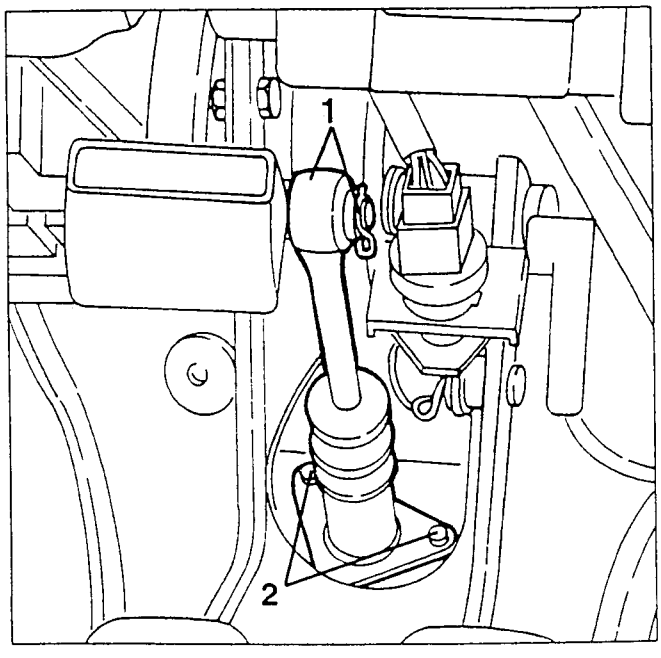

1. Move the clutch pump backwards just enough to disconnect the union of the cylinder connection pipes, then remove it.

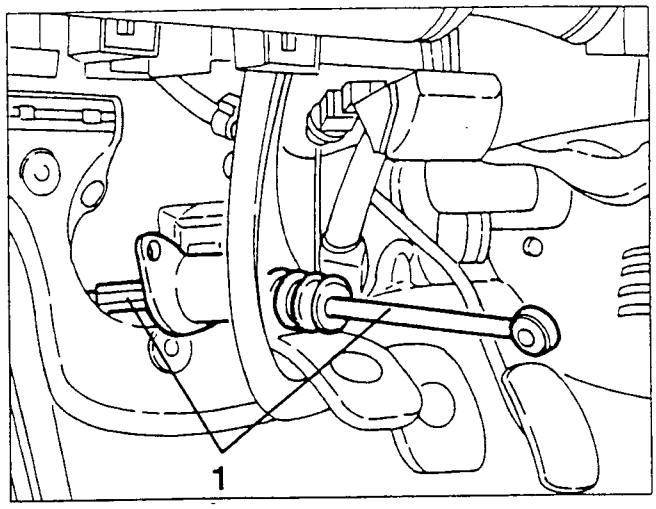

DIS-ASSEMBLY/RE-ASSEMBLY

1. Prise off the protective boot.
2. Remove the piston retainer ring.

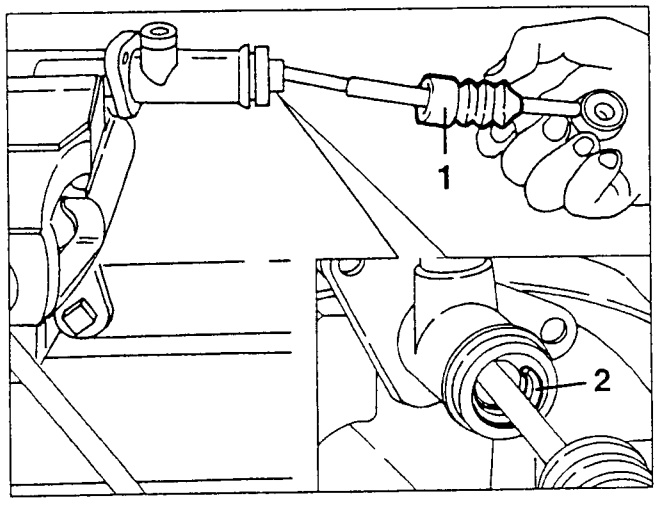

1. Remove the piston and the operating lever.
2. Remove the gasket.

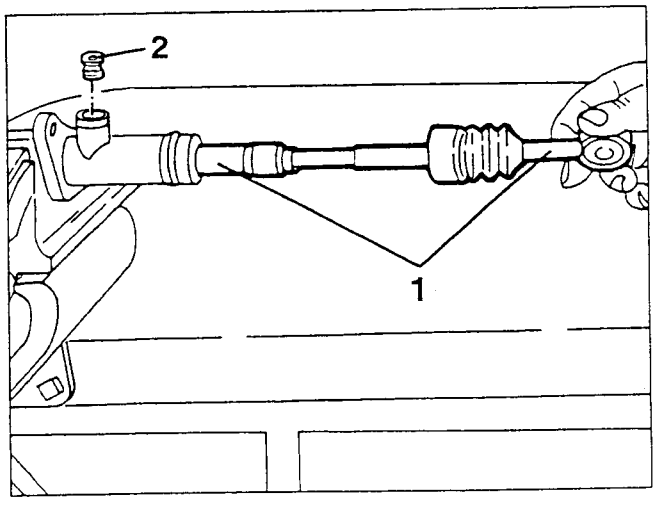

- Check the piston and the cylinder inner surface for marks, scores, scratches or rust and change the pump assembly if necessary.

CLUTCH PEDAL

REMOVAL/REFITTING

1. Remove the safety catch and disconnect the clutch pump from the pedal.
2. Slacken the fastening bolt and remove the clutch pedal.

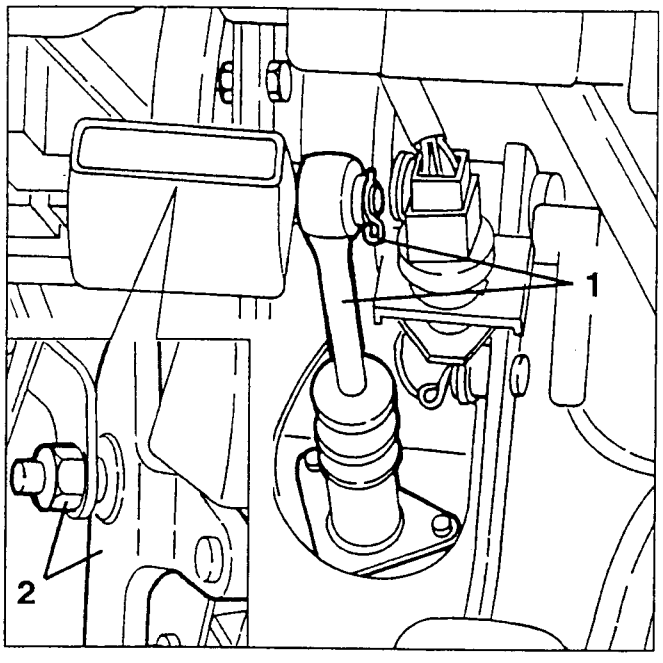

CLUTCH CONTROL CYLINDER

REMOVAL/REFITTING

- Remove the battery (see GROUP 55).
- Empty the brake-clutch fluid reservoir using a suitable syringe.

1. Slacken the two fastening screws and move the fan relays to one side.

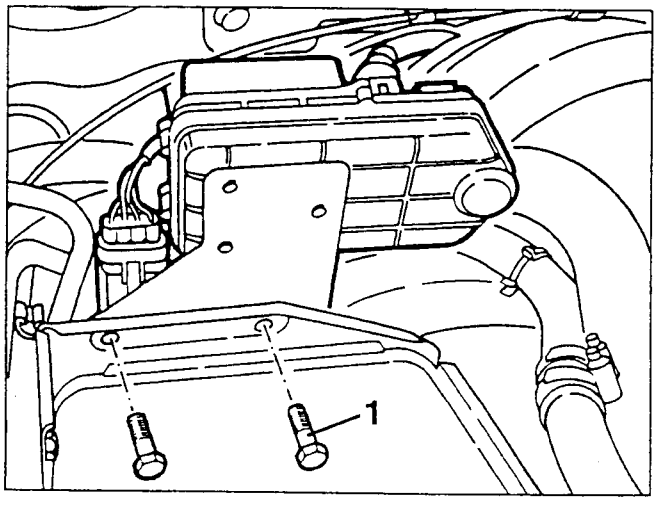

- Remove the battery acid drain duct.

1. Slacken the battery bracket fastening screws, then remove it after disconnecting the glow plug control unit cables from it.

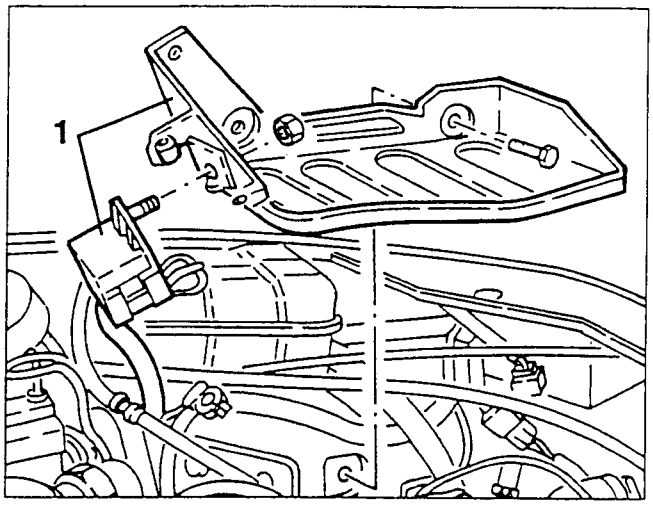

1. Slacken the two screws fastening the clutch control cylinder.
2. Disconnect the pump inlet hose fitting from the clutch control cylinder.
3. Remove the clutch control cylinder.

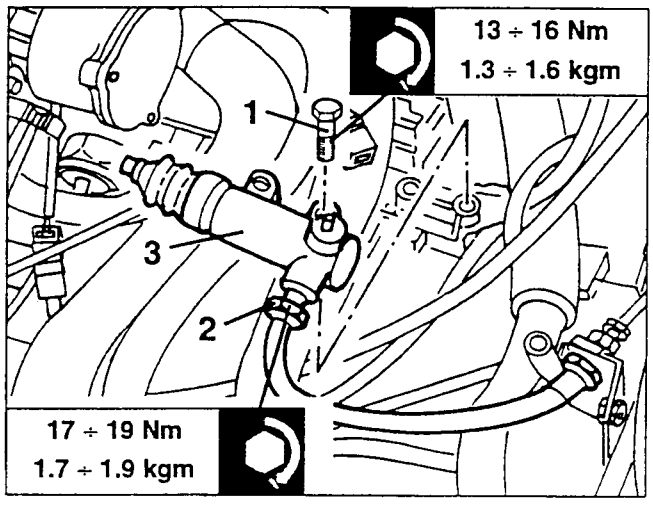

DIS-ASSEMBLY/RE-ASSEMBLY

1. Prise off the rubber boot and remove it together with the control prod.
2. Remove the piston from the cylinder body with its seals.
3. Remove the spring.
4. Only if necessary, remove the air relief screws.

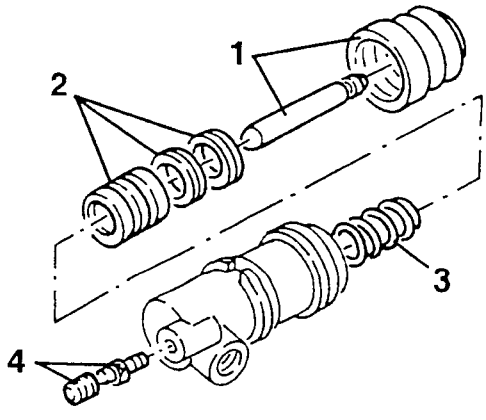

WARNING
Always change the gaskets when re-assembling.

CHECKS AND INSPECTIONS

- Check the piston and the cylinder inner surface for scores or traces of rust and change the cylinder assembly if necessary.
- Check that the spring is intact.
- Check that the air relief hole is not clogged.

BLEEDING AIR FROM THE HYDRAULIC SYSTEM

WARNING:
Never re-use the hydraulic fluid resulting from the bleeding operation.

1. Remove the cap on the clutch and brake fluid reservoir and if necessary top up the level with the specified fluid.
2. Remove the protective cap from the relief screw on the cylinder and push a hose onto the screw with the other end in a transparent container full of the same hydraulic fluid as the circuit.
3. Slacken the relief screw while pressing the clutch pedal allowing it to return slowly; repeat this operation until all the air trapped in the circuit has been eliminated.
- Then with the clutch pedal completely depressed, tighten the relief screw, remove the hose and refit the protective cap.

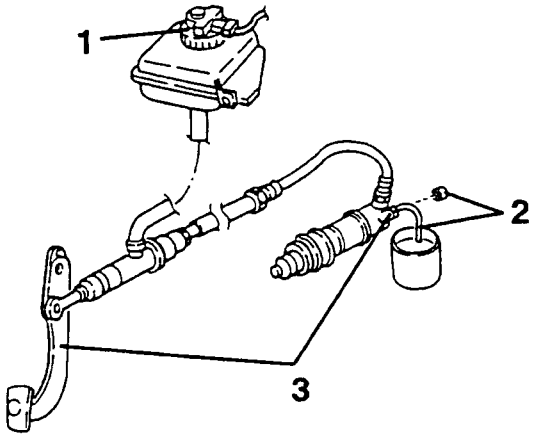

During the bleeding operation, the level of the fluid in the reservoir must never fall below the "MIN" mark.

- Top up the level of the fluid in the reservoir and refit the cap.

Brake/clutch fluid can damage the paintwork, therefore proceed with care.

- After bleeding, check that the clutch and gears disengage and engage properly.
1. Also check that the disengagement stroke of the clutch control cylinder is within the specified limits.
This stroke is not adjustable and depends on the volume of the fluid displaced by the clutch pump piston.

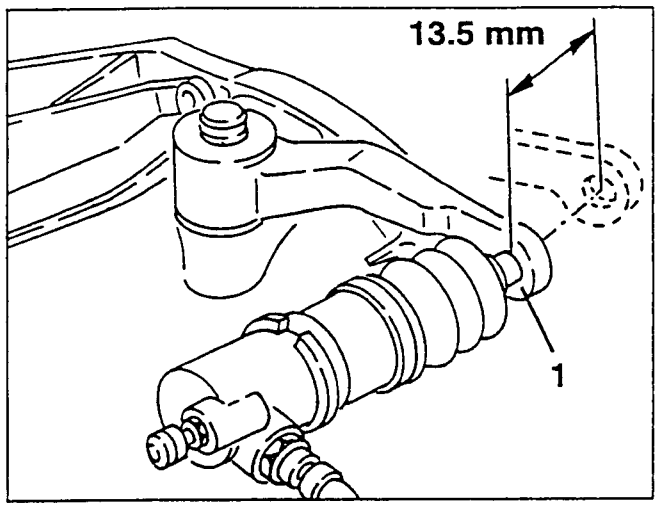

MINIMUM BRAKE - CLUTCH FLUID LEVEL SENSOR

REMOVAL/REFITTING

- Disconnect the battery (-) terminal.
1. Disconnect the electrical connection from the minimum brake-clutch fluid level sensor.
2. Slacken the cap with the built-in minimm brake-clutch fluid level sensor and remove it.

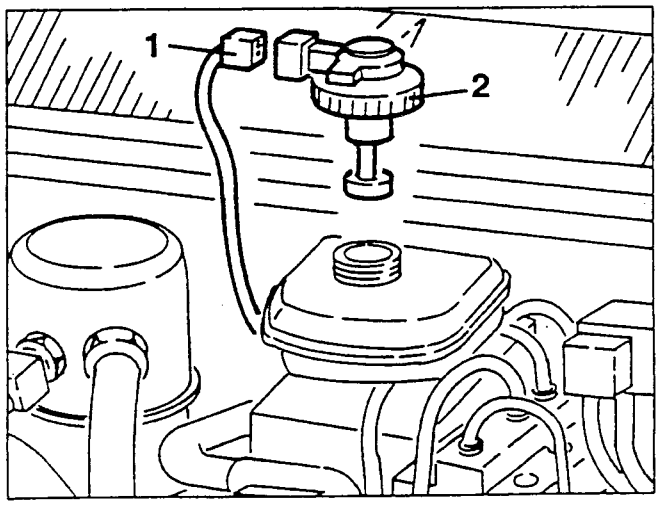

DESCRIPTION

Refer to the instructions for the 1929 TD engine.

CLUTCH PLATE AND PRESSURE PLATE

REMOVAL/REFITTING

- Remove the gearbox-differential unit (see GROUP 21).
- If only the clutch plate is being replaced, mark its position between the pressure plate and flywheel in order to simplify re-assembly operations.

1. Install the flywheel locking tool N° 1.820.624.000.
2. Install tool N° 1.820.126.000 in the clutch plate hub.
3. Slacken the screws fastening the pressure plate to the flywheel.

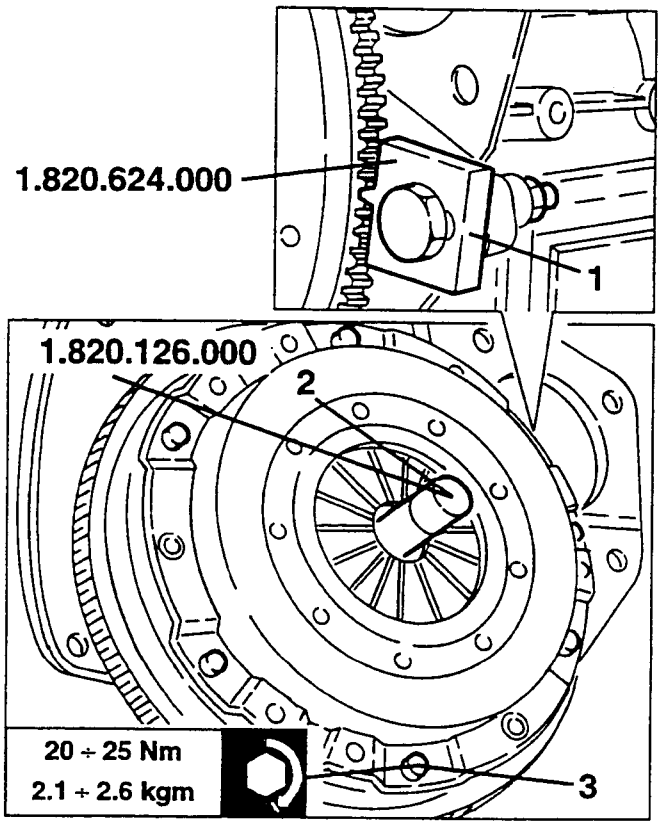

1. Remove the pressure plate.
2. Remove the clutch plate.

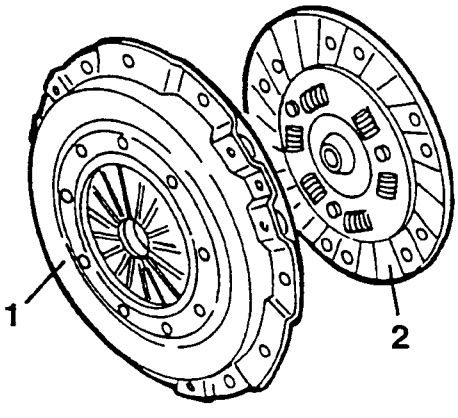

1. Withdraw the thrust bearing from its sleeve in the gearbox cover.

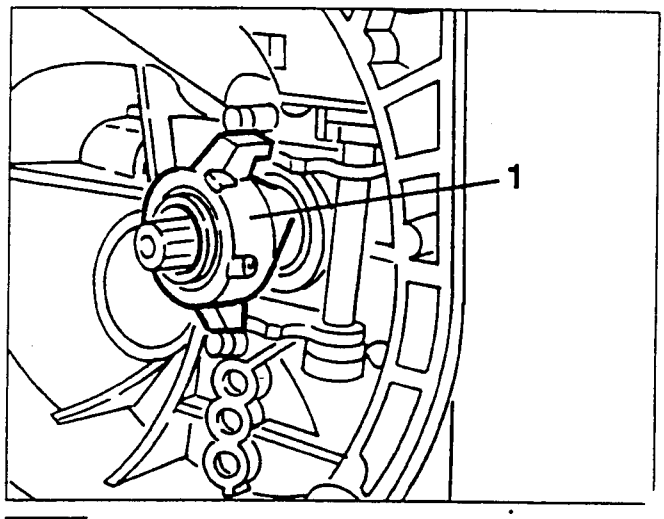

When refitting the bearing, make sure that it runs smoothly and noiselessly, if not, replace it.

- Only if necessary:

1. Remove the seeger lockring and withdraw the clutch engagement control lever.
2. Remove the anti-slip bush from the gearbox cover.
3. Working from inside the gearbox cover remove the clutch engagement sleeve control fork and pin.
4. Slacken the screws fastening the thrust bearing sleeve and remove it.

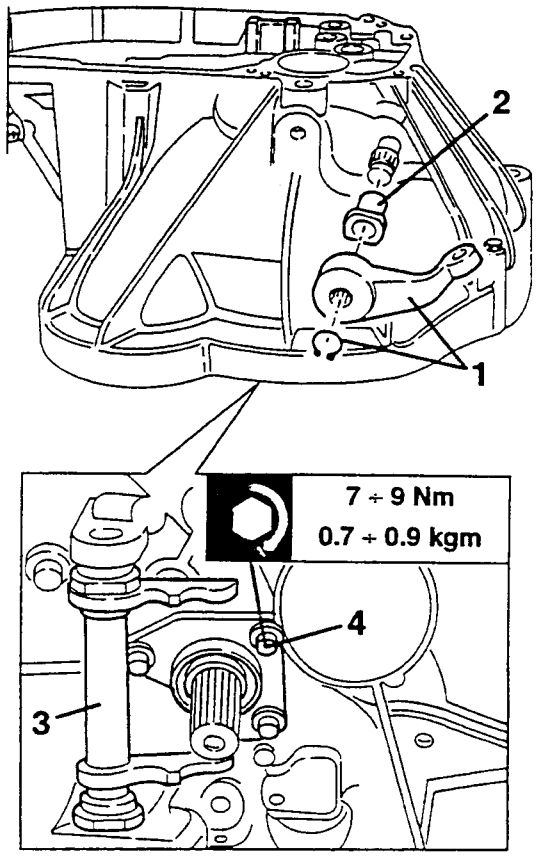

When refitting, install a new anti-slip bush each time the pin has too much play.
When refitting, grease the bushes and the sleeve with the specified product.
The sleeve complete with oil guard must be changed whenever it leaks oil.

CHECKS AND INSPECTIONS

1. Check the gaskets for even wear and that the thickness of the clutch plate is not below the minimum specified.

Thickness "S" of clutch plate (mm)	
New	At the wear limit
7.1 ÷ 7.7	6.3

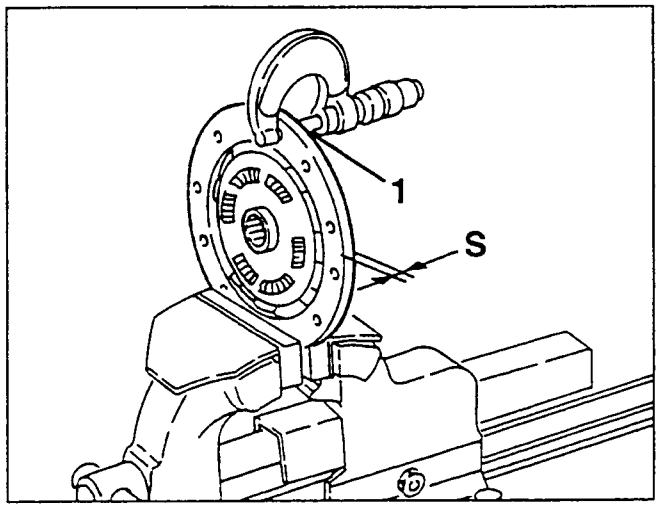

- Check that there are no signs of burning or vitrification, that fastening is correct and that the springs are intact.
- Check that the clutch plate hub is intact, runs freely and that there is no excessive play on the drive shaft coupling.
- Check the working surfaces of the flywheel and pressure plate for signs of overheating, uneven wear, nicks or missing parts.

1. Check the thrust bearing for noise, excessive play and freedom of movement on the drive sleeve.
2. Check the fork for cracks, distorsion, freedom of movement and excessive wear on the working surfaces.

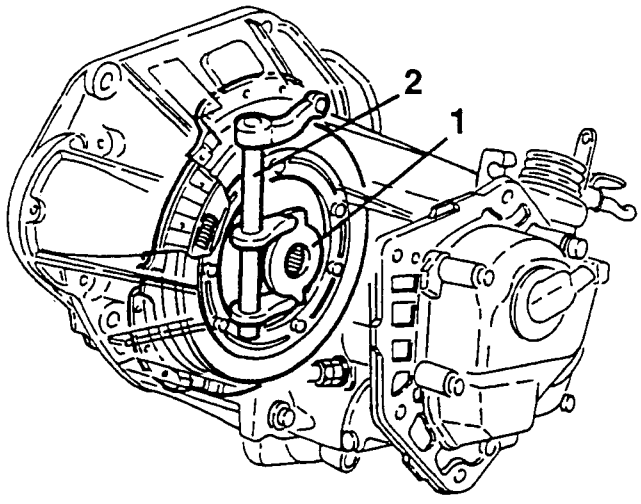

CLUTCH PUMP

Refer to the instructions for the TD engine.

CLUTCH PEDAL

Refer to the instructions for the TD engine.

CLUTCH CONTROL CYLINDER

REMOVAL/REFITTING

- Remove the battery
- Remove the relay from the battery support and set them to one side with their wirings to prevent them from hindering subsequent operations.

1. Slacken the fastening screws, then remove the battery support after removing the rear cable support bracket from it.

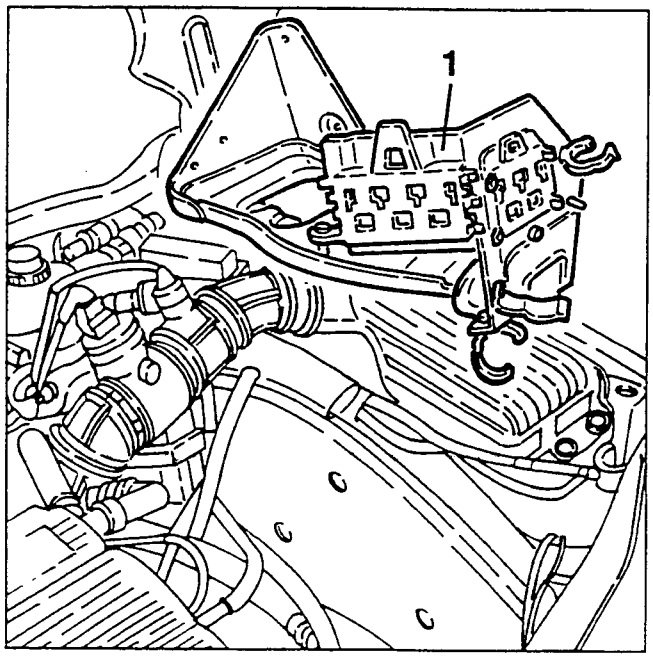

- Using a suitable syringe, empty the brake-clutch fluid reservoir.

Move away the injection wiring to gain access to the clutch control cylinder.

1. Slacken the two screws fastening the clutch control cylinder.
2. Disconnect the fitting of the pump delivery pipe from the clutch control cylinder.
3. Remove the clutch control cylinder.

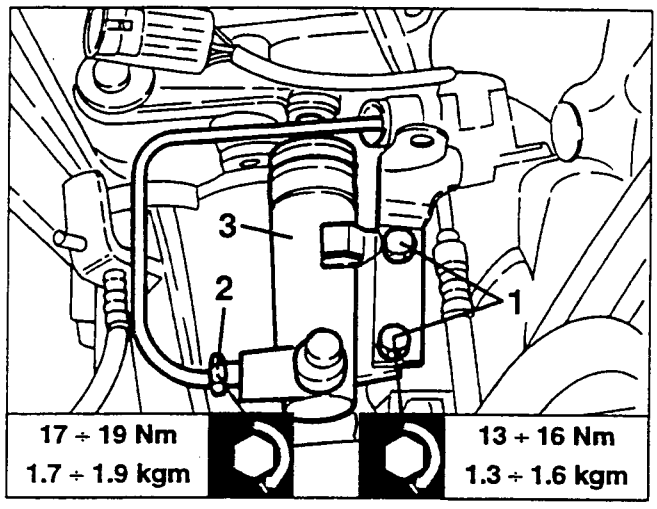

DIS-ASSEMBLY/RE-ASSEMBLY

1. Prise off the rubber boot and remove it together with the control prod.
2. Remove the piston from the cylinder body with its seals.
3. Remove the spring.
4. Only if necessary, remove the air relief screws.

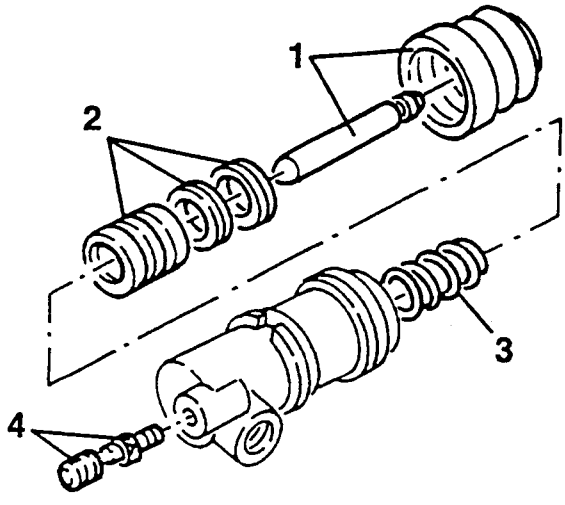

WARNING
Always change the gaskets when re-assembling.

CHECKS AND INSPECTIONS

- Check the piston and the cylinder inner surface fo scores or traces of rust and change the cylinder assembly if necessary.
- Check that the spring is intact.
- Check that the air relief hole is not clogged.

BLEEDING AIR FROM THE HYDRAULIC SYSTEM

Refer to the instructions for the 1929 TD engine.

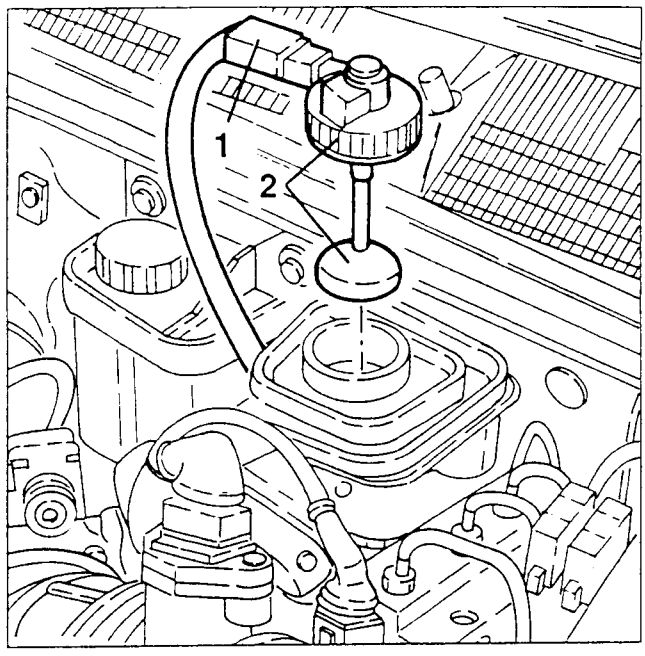

MINIMUM BRAKE - CLUTCH FLUID LEVEL SENSOR

REMOVAL/REFITTING

- Disconnect the battery (-) terminal.

1. Disconnect the electrical connection from the minimum brake-clutch fluid level sensor.
2. Slacken the cap with the built-in minimm brake-clutch fluid level sensor and remove it.

DESCRIPTION

See the description of the 1929 TD engine

CLUTCH PLATE AND PRESSURE PLATE

REMOVING/REFITTING

- Remove the gearbox differential unit (see GROUP 21).
- When changing the clutch plate only, mark the position between pressure plate and flywheel to facilitate refitting operations.

1. Install flywheel stopper tool no. 1.820.624.000.
2. Install tool no. 1.820.124.000 (A.4.0222) in the clutch plate hub.
3. Slacken the screws fastening the pressure plate to the flywheel.

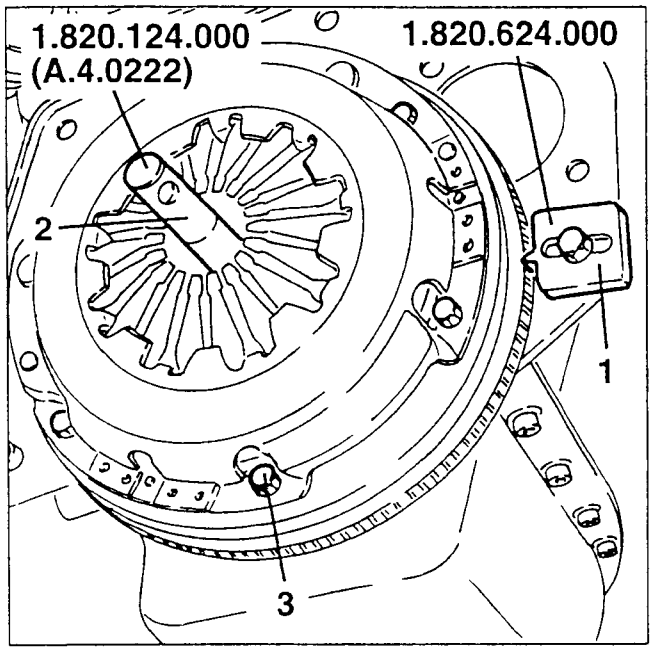

1. Remove the pressure plate.
2. Remove the clutch plate.

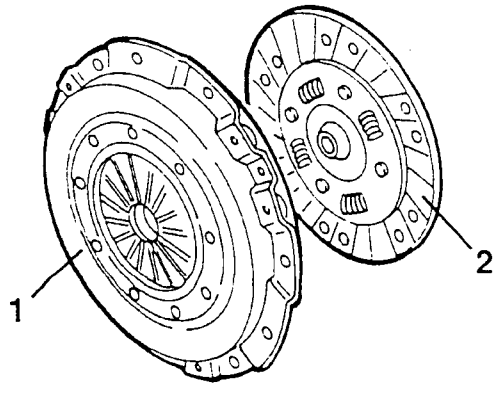

1. Withdraw the thrust bearing from its sleeve on the gearbox cover.

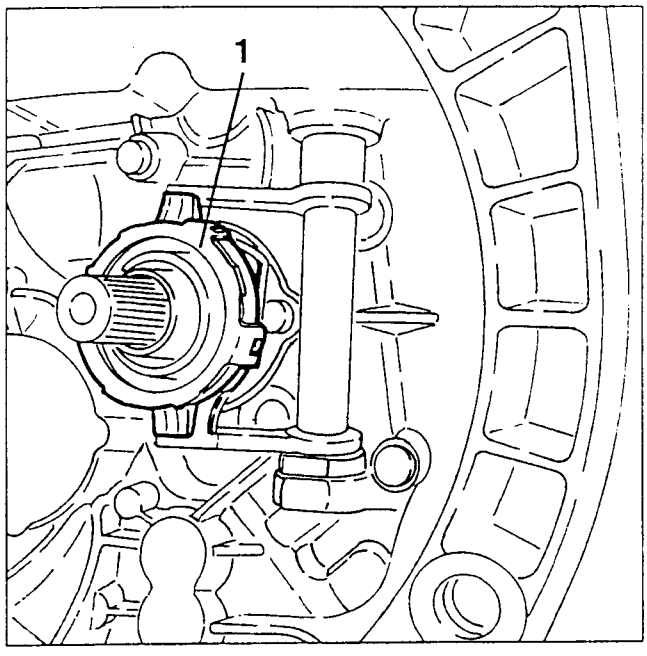

When refitting the bearing must not stick or turn noisily, otherwise it must be replaced.

CHECKS AND INSPECTIONS

1. Check that lining wear is even and that the thickness of the clutch plate is not below the minimum specified limit.

Thickness "S" of clutch plate (mm)	
New	at wear limit
6.7 ÷ 7.3	5.9

- Check that there are no burns or signs of vitrification, that fastening is correct and that the springs are intact.
- Check that the clutch plate hub is intact, slides freely and that there is no excessive play on the engagement of the power takeoff shaft.
- Check the working surfaces of the flywheel and pressure plate for signs of overheating, eneven wear, nicks or material removal.
- Check the thrust bearing for noise, excessive play and that it runs freely on the guide sleeve.
- Check the fork for cracks, distortion, freedom of movement and excessive wear on the working surfaces.